Curb Finder — factory roof curbs by OUTSIDE size

182 factory curbs with an outside size, major US brands. OUTSIDE = the outside of the steel curb rail, measured with a tape, L × W in inches (either order). Openings are inside sizes of the duct openings (S = supply, R = return). Sorted by outside size within each tonnage band; legacy curbs (units mostly before ~2012) first. “2nd outside” = second outline on the drawing (e.g. base vs top rail). ⚠ twin = another curb within 1" outside: check the openings. ✓ = read from manufacturer doc; ✗ = unverified; ≈ = calculated (not read directly off a drawing); F = field-measured on a roof (no factory drawing). A plan-view drawing of every curb follows the table.

OUTSIDE L × W	Brand / curb part	Fit units (tons, years) → new units, no adapter	Openings (inside)	Ver.
UP TO 6 TON — LEGACY				
OUTSIDE 40-11/16 × 33-7/8	Carrier/Bryant/ICP [LEGACY] CPRFCURB001A00 (8 in) / CPRFCURB002A00 (11 in) / CPRFCURB003A00 (14 in)	Carrier 48SS 018-060 residential/light-commercial package gas/electric (c.1998-2006); also Carrier 48SX 024-060 (same CPRFCURB001A00-003A00 table) (1.5-5 T T; c.1998-2006) → Carrier 48SX 024-060 (48SX-4PD p12	S 11.0 x 17.5625 R 16.0 x 17.5625	✓
OUTSIDE 42-3/8 × 35	Daikin/Goodman/Amana [LEGACY] PRC06A1 (Amana flat roof curb, heat pump / cooling footprint; older PRC06A)	Amana PCA 3-5 T; Amana PHD 3-5 T (3-5 T T;) Model prefixes: Amana: PCA (3-5 T), PHD (3-5 T)	S not on file R 19.1875 (along length) x 19 (across)	✗
OUTSIDE 42-3/4 × 42-3/4	Carrier/Bryant/ICP [LEGACY] AXB020CLA (8 in) / AXB020CMA (14 in) / AXB020CHA (24 in)	ICP PGA 3-3.5 T; ICP PAF 3-5 T (3-3.5 T T;) Model prefixes: ICP: PGA (3-3.5 T), PAF (3-5 T)	S 18 (along length) x 18 (across) R 18 (along length) x 18 (across)	✓
OUTSIDE 45-1/8 × 42-11/16	York/JCI [LEGACY] unknown (York Affinity D*NP roof curb, 14 in; 8 in also available) ⚠ twin: York 1RC0463, Carrier CPRFCURB013B00	Affinity Series DNP024-060 gas/electric 13 SEER (2007 TG 291626-YTG-B-0807; R-410A); likely also Affinity heat pump/AC siblings of same cabinet (2-5 T; c.2006-2015 (Affinity DNP))	S 17.125 x 21.5 (recommended duct size) R 17.5 x 16.75 (recommended duct size)	✓
OUTSIDE 45-1/2 × 43-1/2	York/JCI [LEGACY] 1RC0463 (14 in roof curb ADAPTOR) ⚠ twin: York unknown	DNA / DNH small package units (e.g., D1NA/D1NH 2-5 ton Sunline residential-style package) (~2-5 T; 1990s–2000s)	S see drawing (~17-1/4 / 17-5/8 wide) R see drawing	✓
OUTSIDE 45-3/4 × 42-1/2	Carrier/Bryant/ICP [LEGACY] ACL01FB0A (8 in) / ACM01FB0A (14 in) / ACH01FB0A (24 in), full perimeter	ICP PAF 3-5 T (3-5 T T;) Model prefixes: ICP: PAF (3-5 T)	S 16 (along length) x 20 (across) R 21.5 (along length) x 20 (across)	✓
OUTSIDE 46 × 44-3/4 2nd outside (if A–E are inside sizes): 50 × 48-3/4	Daikin/Goodman/Amana [LEGACY] PCCP-1 (curb & platform)	Goodman/Janitrol PCK024-036, PCKJ024-030, PHK024-030 (small chassis, 2-3 T) — chassis list McDaniel p.5 (2-3 T T; 1990s–2000s) → Goodman GPC/GPH (successor) use the different PCCP101-103 curb Model prefixes: Goodman/Janitrol: PCK (2-3 T), PCJ, PCKJ (2-2.5 T), PHK (2-2.5 T)	S not on file R not on file	✗
OUTSIDE 46 × 41-9/16	Rheem/Ruud [LEGACY] RXQG-AAA14 / RXQG-AAA24 (sloped; hinge corners) ⚠ twin: Carrier CPRFCURB013B00	Rheem/Ruud UQKA 3-4 T; Rheem/Ruud UQLA 3-4 T; Rheem/Ruud UQMA 3 T (3-4 T T;) Model prefixes: Rheem/Ruud: UQKA (3-4 T), UQLA (3-4 T), UQMA (3 T)	S 16.6562 (along length) x 16.6562 (across) R 16.6562 (along length) x 20.75 (across)	✗
OUTSIDE 46-1/8 × 30-5/8 2nd outside (on drawing): 47-13/16 × 32-3/8	Carrier/Bryant/ICP [LEGACY] CPRFCURB011B00 (14 in, small/common); older CPRFCURB010A00 (11 in) / CPRFCURB011A00 (14 in) ⚠ twin: York S1-1RC0501	ICP residential/light-commercial packaged gas-electric PGD4/PGS4, WPG4 (small basepan; also usable for large basepan with cross supports moved) (2-5 T (small basepan ~2-3.5 T; check unit) T; c.2010-now (CPRFCURB010A00/011A00 in 2015-era manual, 011B00 later)) → same curb used by ICP small AND large basepan residential packaged units (common curb Model prefixes: Amana: PGD (2-5 (small basepan ~2-3.5; check unit) T) · ICP: PGD (3-5 T), PAD (3-5 T)	S not dimensioned in doc (cross-support spacing B=10 small base; C=16) R not dimensioned in doc	✓

OUTSIDE L × W	Brand / curb part	Fit units (tons, years) → new units, no adapter	Openings (inside)	Ver.
OUTSIDE 46-1/8 × 42-3/16 2nd outside (on drawing): 47-13/16 × 43-7/8	Carrier/Bryant/ICP [LEGACY] CPRFCURB013B00 (14 in, large); older CPRFCURB012A00 (11 in) / CPRFCURB013A00 (14 in) ⚠ twin: York unknown, Rheem RXQG-AAA14	ICP residential/light-commercial packaged PGD4/PGS4, WPG4 large basepan (3.5-5 T (large basepan; check unit) T; c.2010-now) Model prefixes: Amana: PGD (3.5-5 (large basepan; check unit) T) · ICP: PGD (3-5 T), PAD (3-5 T)	S not dimensioned in doc R not dimensioned in doc	✓
OUTSIDE 46-3/8 × 38-7/8	Trane/American Standard [LEGACY] BAYCURB050A	Single-package 2YC*/4YC*, 2WC*/4WC*, 2TC*/4TC*, 2DC*/4DC* 018-036A (1.5-3T convertible packaged; 3T in scope); later 4TCC4024-036 (1.5-3 T; c.2000s-now) → 4TCC4024-036 (Trane 18-EB30D1-1G-EN 2020 names BAYCURB050A). American Standard Installer Guide BAYCURB050A, distributor-hosted (Ferguson) copy of manufacturer PDF, Figure 3 outline 46-3/8 x 38-7/8, height 14, 1-1/2 flange. Roof hole 43-3/8 x 35-7/8.	S 15 x 19.5 R 17.875 x 19.5	✓
OUTSIDE 47 × 35	Daikin/Goodman/Amana [LEGACY] PRC08A1 (Amana combination roof curb with insulated platform)	Amana PGA 3-5 T; Amana PHD 3-5 T (3-5 T T;) Model prefixes: Amana: PGA (3-5 T), PHD (3-5 T)	S not on file R not on file	✗
OUTSIDE 48-3/4 × 45-3/4	Trane/American Standard [LEGACY] (factory curb part unknown)	Trane TCD/WCD 036-060 A revision (3-5 T) — per curb-maker sheet (3-5 T T; 1980s–2000s) Model prefixes: Trane: TCD (3-5 T), WCD (3-5 T)	S not on file R not on file	✗
OUTSIDE 49 × 44-5/8	Rheem/Ruud [LEGACY] RXSG-AAA08 / RXSG-AAA14 / RXSG-AAA18 / RXSG-AAA24 ⚠ twin: Rheem RXQG-AAA08	RRNA (Rheem/Ruud residential-style package gas/electric 13 SEER, 2-5T, one cabinet size) (2-5 T; c.2006-2012 (RRNA, form R11-838 Rev.7)) Model prefixes: Rheem/Ruud: RGEA (3-5 T), RACA (3-5 T), URKA (3-5 T), URMA (3-5 T), USKA (3-5 T), USMA (3-4 T)	S 16-21/32 x 16-21/32 (bay between supports) R 16-21/32 x 20-3/4 (bay between supports)	✓
OUTSIDE 49-1/2 × 41-1/2	Nordyne [LEGACY] 547830/547831/547850/547851 (8/14/18/24 in) ⚠ twin: Daikin PGC-2	R6GD/R6GF/R6GI, R8GD/R8GE, R8HE, P6SD/P8SE, Q6SD/Q8SE 024-060, R4GM-072 (Nordyne commercial/3-phase small package, c.2008-2014) (2-6 T; ~2008–2014)	S 18.5 x 18.5 (duct); curb opening 19 x 19 R 18.5 x 18.5 (duct); curb opening 19 x 19	✓
OUTSIDE 49-1/2 × 43-1/8	Trane/American Standard [LEGACY] (factory curb part unknown) ⚠ twin: Daikin D14CRBPGCHMA	Trane BWC/BTC 048-060 G revision (4-5 T) — per curb-maker sheet (4-5 T T; 1980s–2000s) Model prefixes: Trane: BTC (4-5 T), BWC (4-5 T)	S not on file R not on file	✗
OUTSIDE 49-5/8 × 37	Daikin/Goodman/Amana [LEGACY] PGC-1	Goodman PGB024-036 (050/075 heat inputs) and PHB024-030 (chassis #1) (2-3 T; 1990s–2000s) Model prefixes: Goodman/Janitrol: PGB (3 T) · Amana: PGB (3 T)	S 15.25 x 18 (unconfirmed which of D/E is supply) R 15.25 x 15 (unconfirmed which of D/E is return)	≈
OUTSIDE 49-5/8 × 42	Daikin/Goodman/Amana [LEGACY] PGC-2 ⚠ twin: Nordyne 547830/547831/547850/547851, Daikin D14CRBPGCHMA	Goodman/Amana-era PGB/PHB/PGJ & PG/PGX chassis #2 (024-042 per McDaniel table p3) (2.5-3.5 T; c.1995-2005 (PGB/PHB/PGJ era) Model prefixes: Goodman/Janitrol: PG (3 T), PGB (3 T), PGB (3.5 T) · Amana: PGB (3 T), PGB (3.5 T), PHB (3 T)	S 15.25 x 17 or 15.25 x 21 (which is supply not labeled) R 15.25 x 21 or 15.25 x 17	≈
OUTSIDE 54 × 51-1/2 2nd outside (if A–E are inside sizes): 58 × 55-1/2	Daikin/Goodman/Amana [LEGACY] PCCP2-3 (curb & platform)	Goodman/Janitrol PCK042-060, PCKJ036-060, PHK036-060, PHKJ024-060 (medium & large chassis, 2-5 T) — chassis list McDaniel p.5 (2-5 T T; 1990s–2000s) → Goodman GPC/GPH (successor) use the different PCCP101-103 curb Model prefixes: Goodman/Janitrol: PCK (3.5-5 T), PCJ, PCKJ (3-5 T), PHK (3-5 T), PHKJ (2-5 T)	S not on file R not on file	✗
OUTSIDE 56-1/8 × 41-7/8	Trane/American Standard [LEGACY] BAYCURB051A	Single-package 2YC*/4YC* gas-electric, 2WC*/4WC* heat pump, 2DC*/4DC* dual fuel, 2TC*/4TC* cooling, 042-060A (3.5-5T convertible packaged) (3.5-5 T; c.2000s) → 4TCC4042-060, 4TCY4/5 (per Trane installer guides, curb named, not re-measured).	S 19.5 x 20 R 19.5 x 15.875	✓

OUTSIDE L × W	Brand / curb part	Fit units (tons, years) → new units, no adapter	Openings (inside)	Ver.
OUTSIDE 56-3/8 × 44-1/8	Lennox [LEGACY] RMF16-41	GCS16-024/030/036 (also usable on GCS16-048/060 and GCS20-036/048/060 with slight unit overhang); 1980s-2000s (2-5 T; 1980s–2000s) Model prefixes: Lennox: GCS16 (3 T), GCS20R (3 T), GCS20R (3.5-5 T), CHA16 (3 T), CHA16 (4-5 T), CHP16 (3 T), CHP16 (4-5 T), CHP20 (3 T), CHP20 (4-5 T)	S 20-9/16 x 24-1/2 (F x depth to support angle) R 24-3/8 x 20-1/2 (E x depth to field plenum angle)	✓
OUTSIDE 56-3/4 × 39-1/2	Carrier/Bryant/ICP [LEGACY] 304851-301	Bryant 559D 3 T; Bryant 599E 3 T; Bryant 542D 3 T (3 T T;) Model prefixes: Bryant: 559D (3 T), 599E (3 T), 542D (3 T)	S not on file R not on file	✗
OUTSIDE 56-3/4 × 53-3/4	Daikin/Goodman/Amana [LEGACY] PGC-3	Goodman PGB/PHB/PGJ chassis #3 (PGB042-125, PGB048, PGB060; PGJ036-048; PHB042-060) (3.5-5 T; c.1995-2005 (PGB/PHB/PGJ era) Model prefixes: Goodman/Janitrol: PG (3.5-5 T), PGB (3.5 T), PGB (4-5 T), PGJ (3-4 T) · Amana: PGB (3.5 T), PGB (4-5 T), PHB (3.5-5 T)	S 17.25 x 25.375 or 17.25 x 27.375 (which is supply not labeled) R 17.25 x 27.375 or 17.25 x 25.375	≈
OUTSIDE 57-1/2 × 46-1/2	Trane/American Standard [LEGACY] (factory curb part unknown)	Trane BTC 4-5 T; Trane BYC 3-5 T; Trane BWC 4-5 T (3-5, 4-5 T T;) Model prefixes: Trane: BTC (4-5 T), BYC (3-5 T), BWC (4-5 T)	S not on file R not on file	✗
OUTSIDE 58 × 43	Carrier/Bryant/ICP [LEGACY] Stiles Corp. curb (not factory) 72-24-01	Bryant 559E 3 T (3 T T;) Model prefixes: Bryant: 559E (3 T)	S not on file R not on file	✗
OUTSIDE 61-5/16 × 36-1/2	Carrier/Bryant/ICP [LEGACY] factory curb no. not found (existing-curb size from ProVent CA-SUN3672-CAR04 / CA-LXL-CAR22)	Carrier 50CD 3-6 T; Carrier 50QD 5 T (3-6 T T;) Model prefixes: Carrier: 50CD (3-6 T), 50QD (5 T)	S not on file R not on file	✗
OUTSIDE 61-1/2 × 48-3/8	Daikin/Goodman/Amana [LEGACY] Rebel standard roof curb – small cabinet (P/N not printed)	Daikin Applied Rebel DPS003-006 (3-6T) (3-6 T; c.2009-now (Rebel line)	S 9.69 x 28.55 R 28.69 x 19.1	≈
OUTSIDE 64 × 51-1/4	Carrier/Bryant/ICP [LEGACY] Stiles Corp. curb (not factory) 72-24-02	Bryant 559E 3.5-5 T (3.5-5 T T;) Model prefixes: Bryant: 559E (3.5-5 T)	S not on file R not on file	✗
OUTSIDE 65-1/2 × 32-3/8	Trane/American Standard [LEGACY] (factory curb part unknown)	Trane SACA 5 T; Trane SFCA 5 T (5 T T;) Model prefixes: Trane: SACA (5 T), SFCA (5 T)	S not on file R not on file	≈
OUTSIDE 65-13/16 × 41-7/16 2nd outside (on drawing): 65-3/16 × 40-7/8	Trane/American Standard [LEGACY] BAYCURB042A / BAYCURB042*	first-gen 'C' Voyager/Precedent T*C036A-060A, TSC060A, TSC/YSC036-060E, THC/YHC033-063A, YSC060B, WSC036-060A, WSC036E/048E, WSC060B (c.2004-2010); same curb continued for Precedent B/F cabinets T/YSC036-060G, T/YHC036-037E, T/YZC036E, WSC036-048H; ACC-SVN43N (2020) p1 also lists WSC060ED and D/WHC036H (3-5 T; ~2004–now) → Trane Precedent 3–5T (T/YSC, T/YHC, T/YZC) — same curb Model prefixes: Trane: YSC (3-5 T), YHC (3 T), YZC (3 T), YSK (3-5 T), YHK (3 T), TSC (3-5 T), THC (3 T), TZC (3 T), TSK (3-5 T), THK (3 T), WSC (3-5 T), WHC (3 T), DHC (3 T), WSK (3-5 T) · American Standard: YSC (3-5 T), YHC (3 T)	S 17.875 x 16.75 R 25.1875 x 14.5625	✓

OUTSIDE L × W	Brand / curb part	Fit units (tons, years) → new units, no adapter	Openings (inside)	Ver.
OUTSIDE 67-1/8 × 36-15/16 2nd outside (on drawing): 70-3/4 × 40-1/2	Carrier/Bryant/ICP [LEGACY] CRRFCURB001A00 (14 in) / CRRFCURB002A00 (24 in); older Carrier no. 50DJ900771 (50DJ007, 1990) ⚠ twin: Daikin 14CURB3672B - Goodman CPC/CPG/CPH & Daikin DCC/DCG 3-6T full-perimeter curb, York 1RC0456, Carrier CRRFCURB001A01	Carrier 48TJ004-007 (1990s-2000s legacy); per Carrier same small-cabinet curb family reused by 48HJ004-007, 48TF/48TM004-007 era units and current 48TC/48HC/48FC small cabinets (successor CRRFCURB001A01/002A01) | ALSO Carrier 48DJ004-007 / 50DJ004-007 (mid-1980s to mid-1990s) - same curb (Carrier 1990 50DJ007 sheet shows the identical curb, 50DJ900771) | ALSO Carrier 48HE003-006 (Carrier 48H-1PD p.45 names CRRFCURB001A01/002A01 for 48HE003-006) = Bryant 581C024-060; 50HE003-006 / Bryant 551C024-060 (same cabinet, NYC MEA 181-07-E) (3-6 T T; 1990s–2000s) → Carrier 48TC/48HC/48FC 04–07 and Bryant 580J (successor curb CRRFCURB001A01, same family, within ¼") · Daikin DF/DR 3–6T (Daikin says it fits Carrier/Bryant/ICP curbs) Model prefixes: Carrier: 48DJ (3-6 T), 48GJ (5 T), 48LJ (3-6 T), 48HM (6 T), 48HJ (3-6 T), 48TJ (3-6 T), 48TF (3-6 T), 48TM (3-6 T), 50DJ (3-6 T), 50GJ (5 T), 50LJ (3-6 T), 50HM (6 T), 50HJ (3-6 T), 50TJ (3-6 T), 50TF (3-6 T), 50TFF (3-6 T), 50TM (3-6 T), 50QJ (3-5 T), 50LJQ (3-6 T), 50HJQ (3-6 T), 50TJQ (3-6 T), 50TFQ (3-6 T) · Bryant: 580C (3-6 T), 580D (3-6 T), 580F (3-6 T), 581A (3-6 T), 581B (3-6 T), 581C (2-5 T), 551A (3-6 T), 551B (3-6 T), 551C (2-5 T), 558C (3-6 T), 558D (3-6 T), 558F (3-6 T), 548C (3-6 T), 548D (3-6 T), 548F (3-6 T), 549B (3-6 T), 549C (2-5 T)	S 13.44 (along length, 1'-1 7/16) x 19.81 (across, 1'-7 13/16) R 13.125 (across, 1'-1 1/8) x 31.625 (along length, 2'-7 5/8)	✓
OUTSIDE 67-3/4 × 42-3/4	Carrier/Bryant/ICP [LEGACY] AXB030CLA (8 in) / AXB030CMA (14 in) / AXB030CHA (24 in)	ICP PGB 3-5 T (3-5 T T;) Model prefixes: ICP: PGA (4-5 T), PGB (3-5 T)	S 23 (along length) x 23 (across) R 23 (along length) x 23 (across)	✓
OUTSIDE 67-15/16 × 35-15/16	Trane/American Standard [LEGACY] (factory curb part unknown) ⚠ twin: Carrier CRRFCURB001A00	Trane BYC 5 T; Trane SFDB 5 T (5 T T;) Model prefixes: Trane: BYC (5 T), SFDB (5 T)	S not on file R not on file	✗
OUTSIDE 68-1/8 × 39-3/8	Carrier/Bryant/ICP [LEGACY] (factory curb part unknown)	Carrier 48/50 EQ, DG, EP, DP, PQ and 50RQ 006 (5 T, 1980s-90s) — per curb-maker sheet (5 T T; 1980s–1990s) Model prefixes: Carrier: 48DP (5 T), 50DP (5 T), 50PQ (5 T), 50EQ (5 T)	S not on file R not on file	✗
OUTSIDE 68-1/2 × 66	Carrier/Bryant/ICP [LEGACY] factory curb no. not found (existing-curb size from ProVent CA-SUN3672-CAR16)	Carrier 48DH 3-4 T; Carrier 48DL 4 T; Carrier 48DM 3 T (3-4 T T;) Model prefixes: Carrier: 48DH (3-4 T), 48DL (4 T), 48DM (3 T)	S 26 (along length) x 16 (across) R 26 (along length) x 22 (across)	✗
OUTSIDE 68-3/4 × 44-1/2	Carrier/Bryant/ICP [LEGACY] 304851-302	Bryant 559D 3.5-5 T; Bryant 542D 3.5-5 T (3.5-5 T T;) Model prefixes: Bryant: 559D (3.5-5 T), 542D (3.5-5 T)	S not on file R not on file	✗
OUTSIDE 69 × 50-1/2	Lennox [LEGACY] RMF16-65	GCS16-048/060, GCS20-036/048/060 (3-5 T; 1980s–2000s) Model prefixes: Lennox: GCS16 (4-5 T), GCS20R (3.5-5 T), CHA16 (4-5 T), CHP16 (4-5 T), CHP20 (4-5 T)	S 20-1/2 x 24-1/2 (F x depth to support angle) R 24-1/4 x 20-1/2 (E x depth to field plenum angle)	✓
OUTSIDE 69-1/8 × 36-1/2	Carrier/Bryant/ICP [LEGACY] 309427-101 ⚠ twin: Carrier 48HD/48LD 004-007 accessory curb	Bryant 579D 3-5 T | ALSO Carrier 48HDT/48LDT 004-006 and 48HD/48LD 007 (ProVent CASUN3672CAR03 lists them with 579D 036-060 on one existing curb; unverified) (3-5 T T;) Model prefixes: Carrier: 48HD (6 T), 48HDT (4-5 T), 48LD (6 T), 48LDT (3-5 T) · Bryant: 579D (3-5 T)	S not on file R not on file	✗
OUTSIDE 69-1/2 × 37	Carrier/Bryant/ICP [LEGACY] 48HD/48LD 004-007 accessory curb (factory part # not found) ⚠ twin: Carrier 309427-101	Carrier 48HD 3-6 T; Carrier 48LD 3-5 T (3-5, 3-6 T T;) Model prefixes: Carrier: 48HD (3-6 T), 48LD (3-5 T)	S not on file R not on file	✗
OUTSIDE 70-1/2 × 62-1/2	Carrier/Bryant/ICP [LEGACY] 304851-304	Bryant 579E 4-5 T (4-5 T T;) Model prefixes: Bryant: 579E (4-5 T)	S not on file R not on file	✗

OUTSIDE L × W	Brand / curb part	Fit units (tons, years) → new units, no adapter	Openings (inside)	Ver.
OUTSIDE 70-7/8 × 46-9/16	Carrier/Bryant/ICP [LEGACY] 314213-201	Bryant 580B 3-6 T; Bryant 558B 3-6 T; Bryant 548B 3-5 T (3-5, 3-6 T T;) Model prefixes: Bryant: 580B (3-6 T), 558B (3-6 T), 548B (3-5 T)	S not on file R not on file	✗
OUTSIDE 70-7/8 × 42-9/16	Rheem/Ruud [LEGACY] RXKG-BAD14 / RXKG-BAD24 ⚠ twin: Lennox Z1CURB70A-1, Daikin 0270L02688MC, Lennox Lennox cat. 11F76	RKKA 3-7.5T, RKMA 6T (Classic, c.2004-2008); also RKNA 3-5T (13 SEER) per same catalog (3-7.5 T; ~2004–2010) → Current Rheem/Ruud 3–7.5T on the RXKG curb (≈71 × 42⅝) Model prefixes: Rheem/Ruud: RKKA (3-6 T), RKMA (3-6 T), RKNA (3-5 T), RJKA (3-5 T), RJMA (3-5 T), UKKA (3-7.5 T), UKMA (3-6 T), UJKA (3-5 T), UJMA (3-5 T)	S 13.125 x 19.875 R 21.625 x 19.875 (std cabinet) / 27.125 x 19.875 (6T RKMA & 7.5T stretch)	✓
OUTSIDE 71 × 42-5/8	Rheem/Ruud [LEGACY] RXKG series (Micrometl 60-201-2008 8in / 60-201-2018 18in) ⚠ twin: Lennox Z1CURB70A-1, Daikin 0270L02688MC, Lennox Lennox cat. 11F76	RKNA, RKNL, RKPL, RJKA, RJNA, RJNL, RJPL, RLNA, RLNL, RLPL (3-5T std 76-1/4in cabinet); RKKA, RLKA 3-7.5T; RKMA, RLMA, RKKL, RLKL, RJNL 6T (82-1/4in stretch cabinet) (3-7.5 T; 2000s–2010s) → Current Rheem/Ruud 3–7.5T (RXKG curb) Model prefixes: Rheem/Ruud: RKKA (3-6 T), RKMA (3-6 T), RKNA (3-5 T), RLKA (3-6 T), RLMA (6 T), RLNA (3-5 T), RJKA (3-5 T), RJMA (3-5 T), RJNA (3-5 T), UKKA (3-7.5 T), UKMA (3-6 T), ULKA (3-7.5 T), ULMA (6 T), UJKA (3-5 T), UJMA (3-5 T)	S 13.25 x 19.75 R 21.625 x 19.75 (76in cab) / 27.125 x 19.75 (82in cab)	✓
OUTSIDE 71 × 42-5/8	Rheem/Ruud [LEGACY] RXKG-AAB08 / -AAB14 / -AAB18 / -AAB24 (also UXKG-AAB..) ⚠ twin: Daikin 0270L02688MC, Lennox Z1CURB70A-1, Lennox Lennox cat. 11F76	(-)xxx 036-072 and 085 package units (3-6T and ~7T; RKKA/RKNA-era Rheem/Ruud light commercial — exact series not named in the doc) (3-7 T; unverified, likely late 1990s-early 2000s (older (-)XKG-AAB generation before RXKG-BAD/CAD)) → same 71 x 42-5/8 footprint as RXKG-BAD/CAD (RKKA/RKNA/RKNL 3-7.5T) so later Rheem 3-6T units sit on it Model prefixes: Rheem/Ruud: RKKA (3-7.5 T), UKKA (3-7.5 T)	S 13.25 x 19.75 (duct) R 21.625 x 19.75 (036-072) / 27.125 x 19.75 (085) (duct)	✓
OUTSIDE 73 × 37-1/4 2nd outside (ProVent CBKDSUN3672 replacement curb O.D. (unverified)): 72-1/2 × 36-3/4	York/JCI [LEGACY] 1RC0434 (14 in) / 1RC0465 (8 in) ⚠ twin: York 1RC0442	Sunline Plus DF072 (6T, R-22, 2007 TG 254599-YTG-C-0807) and ZE/XN036-072 (3-6T, R-410A, 2019 TG 5190086-YTG-G-1119) - both show the same 73 x 37-1/4 curb drawing | ALSO York/Coleman/Luxaire D-series D1/D2/D3 CE, CG, EE, EG, CV 036-076 (Sunline / Sunline Plus 3-6.5T, c.1990s-2000s) per curb-maker list (see notes) (3-6 T; c.1990-now (Sunline D-series 3-6.5T through ZE/XN)) → ZE/XN036-072 (and per existing row ZE/ZF 036-072 Model prefixes: York: D1CG (3-6 T), D2CG (3-6 T), D3CG (3-6 T), D4CG (3-6 T), D6CG (3-6 T), D7CG (3-6 T), D8CG (3-6 T), D9CG (3-6 T), D1CE (3-6 T), D3CE (3-6 T), D4CE (3-6 T), D5CE (3-6 T), D6CE (3-6 T), D1EE (3-6 T), D1EG (3-6 T), D2HE (3-6 T), D2HG (3-6 T), D3HE (3-6 T), D3HG (3-6 T), B1CH (3-5 T), B2CH (3-5 T), B3CH (3-5 T), B4CH (3-5 T), B5CH (3-5 T), B6CH (3-5 T), B7CH (3-5 T), B1DF (3-5 T), DF (3-6 T), DH (3-5 T), DJ (3-5 T), DM (3-6 T), DR (3-6 T), DY (3-5 T), BP (3-6 T), BQ (3-5 T), ZE (3-6 T), XN (3-6 T) · York (Coleman/Luxaire): DG (3-6 T), DK (3-6 T), DL (3-6 T), DS (3-6 T), DU (3-6 T), DW (3-6 T), ZS (3-6 T), ZK (3-5 T), BA (3-6 T), BB (3-5 T), XA (3-5 T)	S 19.25 x 19.25 R 19.25 x 19.25	✓
OUTSIDE 73 × 37-1/4 2nd outside (ProVent CBKDSUN3672 replacement curb O.D. (unverified)): 72-1/2 × 36-3/4	York/JCI [LEGACY] 1RC0442 ⚠ twin: York 1RC0434	3-6 ton single package rooftops with & without bottom condensate drain (Sunline small cabinet, ~2007) (3-6 T; ~2007) → York ZE/ZF 036–072 (same outside; openings differ from 1RC0434)	S 17 x 19 R 17 x 19	✓
OUTSIDE 75-3/4 × 51-1/2	Lennox [LEGACY] RMFG10-65 (14 in, with unit mounting platform)	GCS10 / GCS10E packaged gas/electric (25,000-58,500 Btuh cooling), 1980s (2-5 T; c.1984-1990 (bulletin Jan 1988)) Model prefixes: Lennox: GCS10 (3-5 T)	S 24 x 26.75 R 24 x 19.75	✓

OUTSIDE L × W	Brand / curb part	Fit units (tons, years) → new units, no adapter	Openings (inside)	Ver.
OUTSIDE 77-1/8 × 47-3/8	Lennox [LEGACY] Roof mounting frame with double duct opening, LGB/LGE036H-060H (14 in); catalog number not printed in submittal ⚠ twin: Lennox 11F70	LGB036H/060H (R-22, c.2000-2004), LGE036H4/060H4 and LCE036/060 (R-410A, 2004-c.2010) high-efficiency L Series (3-5 T; 2000-c.2010) → Strategos SGH/SCH/SHH 036-060 (11F70/11F71) - identical outside and openings. Lennox tech-library PDFs. Model prefixes: Lennox: LGB (3-5 T), LGE (3-5 T), LCB (3-5 T), LCE (3-5 T)	S 20 x 20 R 16.5625 x 30	✓
OUTSIDE 77-5/8 × 43-3/8 2nd outside (on drawing): 77-1/4 × 43-1/16	Trane/American Standard [LEGACY] BAYCURB021* (BAYCURB021B) ⚠ twin: Rheem 7-7.5 T T curb	Voyager T/YCD036-060C, WCD036-060 (3-5T, pre-2004 Voyager I "C") (3-5 T; c.1990-2004) Model prefixes: Trane: YCD (3-5 T), YCH (3-5 T), TCD (3-5 T), TCH (3-5 T), WCD (3-5 T), WCH (3-5 T)	S curb opening 33-3/16 along the length; field duct 32-5/8 x 14-7/8 R curb opening 12-11/16 across; field duct 38-1/4 x 12-1/8	✓
OUTSIDE 79-3/4 × 41-1/2	Lennox [LEGACY] T1CURB23AN1 (8) / T1CURB20AN1 (14) / T1CURB21AN1 (18) / T1CURB22AN1 (24) cliplock; T1CURB30AN1 / 32AN1 / 33AN1 hinged (8/18/24); T1CURB10AN1 standard 14 ⚠ twin: Lennox C1CURB70A-1, Lennox RMF11-95 roof mounting frame	T-Class TGA/TCA/THA 024-072 (TG A-box) c.2003-2010 (2-6 T; ~2003–2010) → Lennox Energence LGH/LCH and K-series KGA/KCA 3–6T (same curb C1CURB70A–73A) Model prefixes: Lennox: TGA (3-6 T), TCA (3-6 T), THA (3-6 T) · Allied Commercial: TGA (3-6 T), TCA (3-6 T)	S 21.125 x 19.125 R 32 x 15.125	✓
OUTSIDE 81-1/8 × 45-9/16	Carrier/Bryant/ICP [LEGACY] 70849D01 ⚠ twin: Trane BAYCURB022*	Bryant 579C 4-5 T; Bryant 559C 4-5 T; Bryant 599C 4-5 T (4-5 T T;) Model prefixes: Bryant: 579C (4-5 T), 559C (4-5 T), 599C (4-5 T)	S not on file R not on file	✗
OUTSIDE 81-5/8 × 46-3/8 2nd outside (Trane A × B): 81-1/4 × 46-1/16	Trane/American Standard [LEGACY] BAYCURB022* ⚠ twin: Carrier 70849D01	Voyager YCD/YCH, TCD/TCH 061-091 and 102-120C (YC*085C, 100C, 102C, 120C), WCD075-090 (5-10 T; c.1993-2004) Model prefixes: Trane: YCD (5-10 T), YCH (5-10 T), TCD (5-10 T), TCH (5-10 T), WCD (6-7.5 T), WCH (6-7.5 T)	S 17.25 x 36.1875 R 14.375 x 36.1875	✓
OUTSIDE 82-1/8 × 41-1/8	Lennox [LEGACY] LARMF03/07S-14 / -18 / -24 (Cliplock 1000); LARMF03/07-14 / -24 (standard); L1CURB23A-1 (8 in cliplock)	L Series LGA/LCA (LG/LC 036-072, also LHA heat pump same cabinet presumably) c.1996-2008 (3-6 T; ~1996–2008) Model prefixes: Lennox: LGA (3-6 T), LCA (3-6 T), LHA (3-6 T)	S 15.5 x 29.5 R 15.5 x 29.5	✓
OUTSIDE 83-3/4 × 45-5/8	Carrier/Bryant/ICP [LEGACY] factory curb no. not found (existing-curb size from ProVent CA-SUN3672-CAR15)	Carrier 48DH 5 T; Carrier 50DD 5 T; Carrier 50DH 5 T (5 T T;) Model prefixes: Carrier: 48DH (5 T), 50DD (5 T), 50DH (5 T)	S 24.25 (along length) x 18.125 (across) R 24.25 (along length) x 17.375 (across)	✗
OUTSIDE 83-13/16 × 48-1/4	Carrier/Bryant/ICP [LEGACY] CRRFCURB020A00 (14 in) / CRRFCURB032A00 (24 in)	Carrier 48/50PG 03-07 (high-efficiency, ComfortLink, c.2004-2012) (2-6 T T; 2004-c.2012)	S 18.125 x ~44.4 (supply section, split by a 3 in center support; 23.31 + 3 + remainder) R 15.5625 x 24.75 (inside; electrical-service panels beside it)	✓
UP TO 6 TON — CURRENT / RECENT				
OUTSIDE 47-1/8 × 41-5/8	York/JCI S1-1RC0503 (8 in) / S1-1RC0504 (14 in)	York/Luxaire/Coleman/Guardian residential-style packaged units, large cabinet: PCG4B42-B60, PCE4/PHE4 'B' sizes, PC3/PG3/PH3/PC5 large cabinet (3.5-5T) (3.5-5 T; c.2017-now (PCG4/PCE4/PHE4 gen) → current York/Luxaire/Coleman PC3/PG3/PH3/PC5 (large cabinet Model prefixes: Goodman/Janitrol: PC (3.5-5 T), PH (3.5-5 T)	S 15.5 x 17.5 R 15.5 x 17.5	✓
OUTSIDE 47-1/4 × 31-3/4	York/JCI S1-1RC0501 (8 in) / S1-1RC0502 (14 in) ⚠ twin: Carrier CPRFCURB011B00	York/Luxaire/Coleman/Guardian residential-style packaged units, small cabinet: PCG4A24-A42, PCE4/PHE4 'A' sizes, PC3/PG3/PH3/PC5 small cabinet (2-3.5T) (2-3.5 T; c.2017-now (PCG4/PCE4/PHE4 gen) → current York/Luxaire/Coleman PC3/PG3/PH3/PC5 (small cabinet Model prefixes: Goodman/Janitrol: PC (2-3.5 T), PH (2-3.5 T)	S 14.5 x 17.5 R 14.5 x 17.5	✓
OUTSIDE 49 × 44-5/8	Rheem/Ruud RXQG-AAA08 / RXQG-AAA14 / RXQG-AAA18 / RXQG-AAA24 ⚠ twin: Rheem RXSG-AAA08	Rheem/Ruud RQPL 2-5 T (2-5 T T;) Model prefixes: Rheem/Ruud: RQPL (2-5 T)	S not on file R not on file	✓

OUTSIDE L × W	Brand / curb part	Fit units (tons, years) → new units, no adapter	Openings (inside)	Ver.
OUTSIDE 49-1/2 × 42-5/8	Daikin/Goodman/Amana D14CRBPGCHMA (14CRBPGCHMA; replaces PGC101/102/103) ⚠ twin: Daikin PGC-2, Trane 4-5 T T curb	Goodman/Amana/Daikin M-chassis single-package GPG/GPC/GPH/GPD (e.g. GPG14M, GPG13M 2-5T), all sizes, all fuels (2-5 T; c.2013-now (sheet rev. A 7-9-2013) → all current Goodman/Daikin/Amana M-chassis packaged units per sheet ("fits M chassis, all sizes, all fuels" Model prefixes: Goodman/Janitrol: GPG (3-5 T), GPC (3-5 T) · Amana: APG (3-5 T)	S 15 x 22.5 R 12.5 x 23	≈
OUTSIDE 52-7/8 × 44-3/8	Lennox Clip curbs 21J17 (8) / 21J19 (14) / 21J20 (18) / 21J25 (24) for 042-060; 21J13/21J14/21J15/21J16 for 024-036; adjustable pitch 22V55 welded / 21U04 clip (042-060), 22V54 / 21J26 (024-036)	LRP14GE/LRP14GX residential-style packaged gas/electric (also LRP14HP/AC same cabinets per family), 2-5 ton, c.2017-now | ALSO: Q-Series QGA/QCA/QHA 036-060 (R-454B) (2-5 T; c.2017-now) Model prefixes: Lennox: QGA (3-5 T), QCA (3-5 T), QHA (3-5 T) · Allied Commercial: QGA (3-5 T), QCA (3-5 T), QHA (3-5 T)	S 19.5 x 11.5 (042-060); 13.875 x 11.5 (024-036) R 19.5 x 11.5 (042-060); 16.875 x 11.5 (024-036)	✓
OUTSIDE 70-5/8 × 42-1/2	Daikin/Goodman/Amana 0270L02688MC (14 in) / 0270L02689MC (24 in) (Micro Metl 0221L00014 / 0221L00015) ⚠ twin: Rheem RXKG-BAD14, Lennox Z1CURB70A-1, Rheem RXKG series	Daikin DF*/DR* 036-072 AND R-32 DSC/DSG/DSH, DHC/DHG/DHH 036-072 (same 74 x 48-5/16 cabinet) | ALSO Daikin DBC/DBG/DBH 036-072 (IOD-7122 Nov 2019 p.2 lists DRC/DRG/DRH/DBC/DBG/DBH) (3-6 T; 2019-now (DF/DR) and 2024-now (R-32 DS/DH)) → Daikin R-32 DSC/DSG/DSH and DHC/DHG/DHH 3-6T Model prefixes: Daikin: DFG (3-6 T), DFC (3-6 T), DFH (3-6 T), DRG (3-6 T), DRC (3-6 T), DRH (3-6 T), DSG (3-6 T), DSC (3-6 T), DSH (3-6 T), DHG (3-6 T), DHC (3-6 T), DHH (3-6 T)	S 14.976 x 21.5 R 14.188 x 29.149	✓
OUTSIDE 70-3/4 × 40-1/4 2nd outside (Goodman sheet): 74 × 40-1/4	Daikin/Goodman/Amana 14CURB3672B (14 in) - Goodman CPC/CPG/CPH & Daikin DCC/DCG 3-6T full-perimeter curb ⚠ twin: Carrier CRRFCURB001A01, York 1RC0456, Carrier CRRFCURB001A00	Daikin DCG/DCC 3-6T (SS-DCG3, SS-DCG6); same Goodman platform as CPG/CPC 3-6T | ALSO: Goodman CPC/CPG/CPH 036-072 (3-6T, 13 SEER era c.2010-2020); same platform as Daikin DCC/DCG 3-6T (3-6 T; 2010s–now) → Daikin DCC/DCG and Goodman CPG/CPC 3–6T · York Sun Core small (openings line up within ~½") Model prefixes: Daikin: DCG (3-6 T), DCC (3-6 T), DCH (3-6 T) · Goodman/Janitrol: CPG (3-6 T), CPC (3-6 T), CPH (3-5 T)	S 14 x 20 R 31.625 x 14	✓
OUTSIDE 70-7/8 × 40-11/16 2nd outside (on drawing): 67-3/8 × 37-3/16	Carrier/Bryant/ICP CRRFCURB001A01 (14 in) / CRRFCURB002A01 (24 in) ⚠ twin: York 1RC0456, Daikin 14CURB3672B - Goodman CPC/CPG/CPH & Daikin DCC/DCG 3-6T full-perimeter curb, Carrier CRRFCURB001A00	Carrier 48TC 07; 48HC 04-06; 48/50FC 04-07; Bryant 580J 07 (same drawing in each doc) | ALSO Carrier 50TCQ A04-A07 heat pump 3-6 T (50TCQ-07PD Feb 2012 p.26 Fig 4) and ICP RHS036-072 heat pump (ICP RHS product data p.25): same CRRFCURB001A01/002A01, drawn 5'-7 1/8 x 3'-0 15/16 (= alt outline within 1/4) (3-6 T T; ~2010–now) → Carrier 48TC/48HC/48FC 04–07, Bryant 580J · York Sun Core/Select 3–6T (built to this curb; check return) · Daikin DF/DR 3–6T (per Daikin) Model prefixes: Carrier: 48TC (3-6 T), 48HC (3-6 T), 48KC (3-6 T), 48LC (3-6 T), 48JC (3-6 T), 48FC (3-6 T), 48GC (3-6 T), 50TC (3-6 T), 50HC (3-6 T), 50KC (3-6 T), 50LC (3-6 T), 50JC (3-6 T), 50FC (3-6 T), 50GC (3-6 T), 50TCQ (3-6 T), 50HCQ (3-6 T), 50KCQ (3-6 T), 50FCQ (3-6 T), 50GCQ (3-6 T), 48FE (3-6 T), 50FE (3-6 T), 50FEQ (3-6 T), 48GE (3-6 T), 50GE (3-6 T), 50GEQ (3-6 T) · Bryant: 580C (3-6 T), 580D (3-6 T), 581A (3-6 T), 581B (3-6 T), 551A (3-6 T), 551B (3-6 T), 558C (3-6 T), 558D (3-6 T), 558F (3-6 T), 548C (3-6 T), 548D (3-6 T), 548F (3-6 T), 549B (3-6 T), 580J (3-6 T), 581J (3-5 T), 582J (3-5 T), 558J (3-6 T), 551J (3-5 T), 559J (3-6 T), 547J (3-6 T), 548J (3-6 T), 549J (3-5 T), 581K (3-5 T), 551K (3-5 T), 549K (3-5 T), 582K (3-5 T), 559K (3-6 T), 581L (3-5 T), 551L (3-5 T), 549L (3-5 T), 582L (3-6 T), 559L (3-6 T), 547L (3-6 T), 549Q (3-5 T) · ICP: PGE (3-6 T), PGH (3-6 T), PAE (3-6 T), PAH (3-6 T), PHS (3-6 T), PHH (3-6 T), RGS (3-6 T), RAS (3-6 T), RHS (3-6 T), RGH (3-5 T), RAH (3-5 T), RHH (3-5 T), RGX (3-5 T), RAX (3-5 T), RHX (3-5 T), RGV (3-6 T), RAV (3-6 T), RHV (3-6 T), RGW (3-5 T), RAW (3-5 T), RHW (3-5 T), RGF (3-6 T), RAF (3-6 T), RHF (3-6 T), RAG (3-5 T), RHG (3-5 T)	S 14.00 (along curb length) x 20.41 (across) R 13.78 (across) x 32.19 (along length)	✓

OUTSIDE L × W	Brand / curb part	Fit units (tons, years) → new units, no adapter	Openings (inside)	Ver.
OUTSIDE 70-7/8 × 40-11/16	York/JCI 1RC0456 (14 in) / 1RC0458 (24 in) ⚠ twin: Carrier CRRFCURB001A01, Daikin 14CURB3672B - Goodman CPC/CPG/CPH & Daikin DCC/DCG 3-6T full-perimeter curb, Carrier CRRFCURB001A00	Sun Core / Select small footprint: ZQ04-06, ZXA7, ZY04-06, ZL04-06 (Table 199); per other sources also ZM05 and R-454B WYE04-06, WQE04-06, WXEA7 (3-6 T; 2010s–now) → York Sun Core/Select 3–6T (current curb) · Carrier 48TC/48HC 04–07 (Carrier-pattern curb) Model prefixes: York: ZQ (3-5 T), ZX (3-6 T), ZY (3-5 T), ZL (3-5 T), ZQG (3-5 T), ZQE (3-5 T), ZXG (3-6 T), ZXE (3-6 T), ZYG (3-5 T), ZYE (3-5 T), XQ (3-5 T), XX (6 T), XY (3-5 T)	S 14.000 x 20.406 R 32.188 x 13.781	✓
OUTSIDE 70-7/8 × 42	Trane/American Standard BAYCURB320* ⚠ twin: Lennox Z1CURB70A-1, Lennox Lennox cat. 11F76, Daikin 0270L02688MC	Foundation (small) E/GB*036-060 and E/GD*036-060 (EBC/GBC, EDC/GDC) (3-5 T; 2021-now) Model prefixes: Trane: GBC (3-5 T), GDC (3-5 T), GDK (3-5 T), EBC (3-5 T), EDC (3-5 T), EDK (3-5 T) · American Standard: GBC (3-5 T)	S 14.0 x 21.06 R 14.43 x 32.188	✓
OUTSIDE 71 × 42-5/16	Lennox Z1CURB70A-1 (8) / 71A-1 (14) / 72A-1 (18) / 73A-1 (24) hybrid ⚠ twin: Rheem RXKG-BAD14, Rheem RXKG series, Rheem RXKG-CAD14	Raider ZGA/ZCA 3-6 ton (2018+, 50 Hz doc); Lennox markets Raider as fitting high-volume competitor curbs (3-6 T; 2018–now) → Lennox Raider ZGA/ZCA 3–6T (current curb) Model prefixes: Lennox: ZGA (3-6 T), ZGB (3-6 T), ZCA (3-6 T), ZCB (3-6 T), ZHA (3-5 T), ZHB (3-5 T) · Allied Commercial: ZGA (3-5 T), ZCA (3-6 T)	S 17.1875 x 20.25 R 32.0625 x 15	✓
OUTSIDE 71 × 42-5/16	Lennox Lennox cat. 11F76 / 11F77 / 11F78 / 11F79 (hybrid downflow curb 8/14/18/24 in) ⚠ twin: Daikin 0270L02688MC, Rheem RXKG-BAD14, Rheem RXKG series	Z-Series ZGD/ZCD 036-072, ZHD 036-060 (R-454B) (3-6 T; approx 2023-now) Model prefixes: Lennox: ZGD (3-6 T), ZCD (3-6 T), ZHD (3-5 T)	S approx 17.1875 x 20.25 R approx 14 x 15 (drawing labels 14 and 15)	✓
OUTSIDE 71 × 42-5/8	Rheem/Ruud RXKG-CAD14 / RXKG-CAD24 ⚠ twin: Lennox Z1CURB70A-1, Daikin 0270L02688MC, Lennox Lennox cat. 11F76	RKNN, RKPN, RKQN, RKNL, RKPL, RJNL, RJPL, RLNN, RLPN, RLQN, RLNL, RLPL 3-5T; 6T RJNL-072, RKKL-B072, RKKN-B072, RLKL-B072, RLKN-B072; RKPN-C/RKQN-C 3-5T (3-6 T; 2010s–now) → Current Rheem/Ruud RKNL/RKPN/RKQN 3–6T (current curb) Model prefixes: Rheem/Ruud: RLKA (3-6 T), RLMA (6 T), RLNA (3-5 T), RJNA (3-5 T), RKKL (6 T), RKNL (3-5 T), RKPL (3-5 T), RKKN (6 T), RKNN (3-5 T), RKPN (3-5 T), RKQN (3-5 T), RLKL (6 T), RLNL (3-5 T), RLPL (3-5 T), RLKN (6 T), RLNN (3-5 T), RLPN (3-5 T), RLQN (3-5 T), RJNL (3-6 T), RJPL (3-5 T), ULKA (3-7.5 T), ULMA (6 T)	S 13.25 x 19.75 R 21.625 x 19.75 (76in) / 27.125 x 19.75 (82in)	✓
OUTSIDE 74-7/8 × 40-11/16	Rheem/Ruud RXKG-DCC14 / RXKG-DCC24 (welded RXKG-DC14/DC24) ⚠ twin: Daikin 14CURB3672B - Goodman CPC/CPG/CPH & Daikin DCC/DCG 3-6T full-perimeter curb	RGEC Renaissance 3-6T (current) | ALSO Ruud RACCZR/ZT 3-6 T (RACC product data p.76) and RHPCZR 3-5 T heat pump (RHPC p.51; 6 T curb not documented) (3-6 T; current) → Rheem Renaissance 3–6T (current curb) Model prefixes: Rheem/Ruud: RGEC (3-6 T), RACC (3-6 T), RHPC (3-5 T)	S not stated as sizes (drawing labels only; see positions) R not stated as sizes (drawing labels only; see positions)	✓
OUTSIDE 77-1/8 × 47-3/8	Lennox 11F70 (14 in) / 11F71 (24 in) hybrid downflow ⚠ twin: Lennox Roof mounting frame with double duct opening, LGB/LGE036H-060H	Strategos SGH/SCH/SHH (and SDH dual-fuel) 036 & 060; R-410A gen (2021 bulletin) and R-454B gen (2024+) share it (3-5 T; c.2019-now (Strategos)) → Strategos SGH/SCH/SHH 036-060 sits on LGB/LGE 036-060 frames (my comparison of the two drawings Model prefixes: Lennox: SGC (3-5 T), SCC (3-5 T), SGH (3-5 T), SCH (3-5 T)	S 20 x 20 R 16.5625 x 30	✓

OUTSIDE L × W	Brand / curb part	Fit units (tons, years) → new units, no adapter	Openings (inside)	Ver.
OUTSIDE 79-3/4 × 41-1/2	Lennox C1CURB70A-1 (8) / 71A-1 (14) / 72A-1 (18) / 73A-1 (24) hybrid downflow; C1CURB55AT1 adjustable pitch 14 ⚠ twin: Lennox T1CURB23AN1, Lennox RMF11-95 roof mounting frame	LGH/LCH 036-072 Energence A-box (2008+) and K-series KGA/KCA/KHA 036-072; SAME FOOTPRINT AND OPENINGS as legacy T-Class TGA/TCA A-box curb (T1CURB..) | ALSO Lennox Enlight LHT036/048/060/072 heat pump, R-454B (EHB LHT A-box 2025-01 p.42 hybrid curb, 79-3/4 x 41-1/2) (3-6 T; 2008–now) → Lennox K-series KGA/KCA/KHA and Energence LGH/LCH 3–6T Model prefixes: Lennox: LGH (3-6 T), LCH (3-6 T), KGA (3-6 T), KCA (3-6 T), KHA (3-6 T), KHB (3-5 T), LGM (3-6 T), LCM (3-6 T), LGT (3-6 T), LCT (3-6 T), LHT (3-6 T), LDT (3-6 T), LGX (3-6 T), LCX (3-6 T), LHX (3-6 T) · Allied Commercial: KGA (3-6 T), KCA (3-6 T), LGX (3-6 T), LCX (3-6 T), LHX (3-6 T)	S 21.125 x 19.125 R 32 x 15.125	✓
6–12.5 TON — LEGACY				
OUTSIDE 60-3/8 × 55-7/8	Carrier/Bryant/ICP [LEGACY] factory curb no. not found (existing-curb size from ProVent CA-PRD7815-CAR06)	Carrier 48DH 7.5-8.5 T | ALSO Carrier 48DD 008 (7.5 T) - the ProVent sheet's old unit is 48DD 008 (atlas audit) (7.5-8.5 T T;) Model prefixes: Carrier: 48DD (7.5 T), 48DH (7.5-8.5 T)	S not on file R not on file	✗
OUTSIDE 62-1/4 × 40-5/16	Carrier/Bryant/ICP [LEGACY] AXB035CLA (8 in) / AXB035CMA (14 in) / AXB035CHA (24 in); curb adaptor AXB035CAA/CBA (adapts to older AXB030 curbs)	ICP PGE072 package gas/electric (pre-Carrier-curb era, c.2000-2008); likely PAE/PHE 072 same cabinet (unverified) (6 T T; c.2000-2008) Model prefixes: ICP: PGE (6 T), PAE (6 T)	S 13.375 x 19.75 (duct size) R 13.0 x 31.563 (duct size)	✓
OUTSIDE 64-11/16 × 60-3/4	Carrier/Bryant/ICP [LEGACY] 307175-103 / 307175-105	Bryant 559D 7.5-8.5 T (090, 102); Bryant 599D 7.5-8.5 T (090, 102) — one curb per Bryant Fig. 1; Bryant 559E 7.5 T (curb-maker list) (7.5-8.5 T T; 1990s) Model prefixes: Carrier: 50CD (7.5-8.5 T), 50CV (5-8.5 T), 50QD (7.5-8.5 T), 50QV (5 T) · Bryant: 559D (7.5-8.5 T), 559E (7.5 T), 599D (7.5-8.5 T)	S 39.875 (along length) x 26.6875 (across) — inside-dimensioned drawing R 39.875 (along length) x 26.6875 (across)	≈
OUTSIDE 65-1/2 × 43-3/8	Trane/American Standard [LEGACY] (factory curb part unknown) ⚠ twin: Trane 7.5, 8.5 T T curb	Trane BTC 8.3 T; Trane BYC 8.3 T; Trane SADB 8.5 T; Trane SEDB 8.5 T; Trane SFDB 8.5 T (8.3, 8.5 T T;) Model prefixes: Trane: BTC (8.3 T), BYC (8.3 T), SADB (8.5 T), SEDB (8.5 T), SFDB (8.5 T)	S not on file R not on file	≈
OUTSIDE 65-1/2 × 43-3/8	Trane/American Standard [LEGACY] (factory curb part unknown) ⚠ twin: Trane 8.3, 8.5 T T curb	Trane BYC 7.5 T; Trane SACA 7.5 T; Trane SACB 8.5 T; Trane SACC 7.5 T; Trane SFCA 7.5 T; Trane SFCB 7.5 T; Trane SFCB 8.5 T (7.5, 8.5 T T;) Model prefixes: Trane: BYC (7.5 T), SACA (7.5 T), SACB (8.5 T), SACC (7.5 T), SFCA (7.5 T), SFCB (7.5 T), SFCB (8.5 T)	S not on file R not on file	≈
OUTSIDE 67-3/4 × 67-3/4 2nd outside (ProVent O.D.): 68-1/16 × 68-1/16	Daikin/Goodman/Amana [LEGACY] PGC-5	Goodman PGC (gas/elec) & PCC (cooling) 090-120; McDaniel sheet also lists PGB/PCB 090-180 chassis #5A/#5B (7.5-15 T; c.1995-2009 (PGB/PCB then PGC/PCC 090-120) Model prefixes: Goodman/Janitrol: PGB (7.5-15 T) · Amana: PGB (7.5-15 T), PCC (7.5-15 T)	S 19.75 x 42.0 R 19.75 x 42.0	✗
OUTSIDE 71 × 60	Trane/American Standard [LEGACY] (factory curb part unknown)	Trane BYC 12.5 T; Trane SACA 10 T; Trane SACA 12.5 T; Trane SACC 12.5-14 T; Trane SFCA 10 T; Trane SFCA 12.5 T; Trane SFCB 12.5 T; Trane SFCB 12.5-14 T (10, 12.5, 12.5-14 T T;) Model prefixes: Trane: BYC (12.5 T), SACA (10 T), SACA (12.5 T), SACC (12.5-14 T), SFCA (10 T), SFCA (12.5 T), SFCB (12.5 T), SFCB (12.5-14 T)	S not on file R not on file	≈
OUTSIDE 73 × 62	Trane/American Standard [LEGACY] (factory curb part unknown)	Trane SPCA 10 T (cabinet C10); Trane SACB 10 T (C10) — per curb-maker sheet (10 T T; 1980s–1990s) Model prefixes: Trane: SACB (10 T), SPCA (10 T)	S not on file R not on file	✗
OUTSIDE 75-1/2 × 53-3/4	Trane/American Standard [LEGACY] (factory curb part unknown) ⚠ twin: Carrier AXB045CLA, Trane 10 T T curb	Trane BYC 10-10.8 T; Trane SACB 11 T; Trane SFCB 11 T (10-10.8, 11 T T;) Model prefixes: Trane: BYC (10-10.8 T), SACB (11 T), SFCB (11 T)	S not on file R not on file	✗

OUTSIDE L × W	Brand / curb part	Fit units (tons, years) → new units, no adapter	Openings (inside)	Ver.
OUTSIDE 75-1/2 × 54	Trane/American Standard [LEGACY] (factory curb part unknown) ⚠ twin: Carrier AXB045CLA, Trane 10-10.8, 11 T T curb	Trane SACA 10 T; Trane SACC 10 T; Trane SFCA 10 T; Trane SFCB 10 T (10 T T;) Model prefixes: Trane: SACA (10 T), SACC (10 T), SFCA (10 T), SFCB (10 T)	S not on file R not on file	≈
OUTSIDE 75-9/16 × 53-3/16	Carrier/Bryant/ICP [LEGACY] AXB045CLA (8 in) / AXB045CMA (14 in) / AXB045CHA (24 in) ⚠ twin: Trane 10-10.8, 11 T T curb, Trane 10 T T curb	ICP PGE090, 102, 120, 150 package gas/electric (c.2000-2008); PAE/PHE 090-150 likely same (unverified) (7.5-12.5 T T; c.2000-2008) Model prefixes: ICP: PGE (7.5-12.5 T), PAE (7.5-12.5 T)	S 15.6875 (along length, 15-11/16) x 31.375 (across, 31-3/8) R 40.0625 (along length, 40-1/16) x 15.3125 (across, 15-5/16)	✓
OUTSIDE 76-1/8 × 56-1/8	Carrier/Bryant/ICP [LEGACY] factory curb no. not found (existing-curb size from ProVent CA-PRD7815-CAR07) ⚠ twin: Rheem RXRK-E50	Carrier 50DD 10 T (10 T T;) Model prefixes: Carrier: 50DD (10 T)	S not on file R not on file	✗
OUTSIDE 76-1/8 × 56-1/2	Rheem/Ruud [LEGACY] RXRK-E50 ⚠ twin: Carrier factory curb no. not found	(-)RCF/(-)REF-075/076, (-)RGF-150075, (-)RGF-131076, (-)RGF-201076 (legacy 6-7.5T) (T; 1990s–early 2000s)	S not on file R not on file	✗
OUTSIDE 77 × 42-1/2	Rheem/Ruud [LEGACY] (factory curb part unknown) ⚠ twin: Trane BAYCURB021*	Rheem RKKA/RJKA/RLKA/RLMA 085 (about 7 T) — per curb-maker sheet (7-7.5 T T; 1980s–2000s) Model prefixes: Rheem/Ruud: RKKA (7-7.5 T), RLKA (7-7.5 T), RLMA (7-7.5 T), RJKA (7-7.5 T)	S not on file R not on file	✗
OUTSIDE 77-1/2 × 70-9/16	Nordyne [LEGACY] 555631 (horizontal) / 555632 (horizontal w/ duct) ⚠ twin: Carrier 50PQ900221, Nordyne 555617	GR4GM 150/180 (also R4GM 150/180) (12.5-15 T; approx 2004-2010 (forms 770B/774B first issued 10-2004))	S side opening 65.5 x 18 (duct 66 x 18.5) R horizontal (through unit)	✓
OUTSIDE 77-3/4 × 74-1/2	Carrier/Bryant/ICP [LEGACY] 308450-201	Bryant 579D 10-15 T; Bryant 559D 10-15 T (10-15 T T;) Model prefixes: Bryant: 579D (10-15 T), 559D (10-15 T), 599D (10-15 T), 542F (10-15 T)	S not on file R not on file	✗
OUTSIDE 78 × 49-3/4 2nd outside (on drawing): 81-3/4 × 53-3/8	Carrier/Bryant/ICP [LEGACY] CRRFCURB003A00 (14 in) / CRRFCURB004A00 (24 in) ⚠ twin: York 1RC0457, Trane BAYCURB310*, Carrier CRRFCURB003A01	Carrier 48TJ008-014 legacy (also 48TF/48TM008-014 and 48HJ008-014 era); successor CRRFCURB003A01/004A01 for 48TC/48HC 08-14 | ALSO Carrier 48DJ008-014 / 50DJ008-014 (mid-1980s to mid-1990s) - same curb (Carrier 48PG-06PD adapter notes group 48/50 DJ, TJ, HJ, TM 008-014 curbs) (7.5-12.5 T T; 1990s–2000s) → Carrier 48TC/48HC 08–14 and Bryant 580J (successor CRRFCURB003A01, same family) Model prefixes: Carrier: 48DJ (7.5-12.5 T), 48GJ (7.5-10 T), 48LJ (7.5-12.5 T), 48HJ (7.5-12.5 T), 48TJ (7.5-12.5 T), 48TF (7.5-12.5 T), 48TM (7.5-12.5 T), 50DJ (7.5-12.5 T), 50GJ (7.5-10 T), 50LJ (7.5-12.5 T), 50HJ (7.5-12.5 T), 50TJ (7.5-12.5 T), 50TF (7.5-12.5 T), 50TFF (6-12.5 T), 50TM (7.5-12.5 T), 50QJ (7.5-10 T), 50LJQ (7.5-12.5 T), 50TJQ (7.5-10 T), 50TFQ (7.5-10 T) · Bryant: 580F (7.5-12.5 T), 581A (7.5-12.5 T), 581B (7.5-12.5 T), 551A (7.5-12.5 T), 551B (7.5-12.5 T), 558F (7.5-12.5 T), 548D (7.5-12.5 T), 548F (7.5-12.5 T), 549B (7.5-12.5 T)	S 15.25 (along length, 1'-3 1/4) x 30.94 (across, 2'-6 15/16) R 14.875 (across, 1'-2 7/8) x 39.625 (along length, 3'-3 5/8)	✓
OUTSIDE 78-5/8 × 68-1/4	Lennox [LEGACY] (factory curb part unknown)	Lennox CHA8, CHP8, GCS3 511-653 (4-5 T) — per curb-maker sheet (4-5 T T; 1980s–2000s) Model prefixes: Lennox: GCS3 (4-5 T), CHA8 (4-5 T), CHP8 (4-5 T)	S not on file R not on file	✗
OUTSIDE 79-5/8 × 41-5/8	Lennox [LEGACY] RMF11-95 roof mounting frame (double duct opening) ⚠ twin: Lennox T1CURB23AN1, Lennox C1CURB70A-1	Lennox CHA11 7.5 T; Lennox CHP11 7.5 T (7.5 T T;) Model prefixes: Lennox: CHA11 (7.5 T), CHP11 (7.5 T)	S 16.8125 (along length) x 35.875 (across) R 14.3125 (along length) x 35.875 (across)	✓

OUTSIDE L × W	Brand / curb part	Fit units (tons, years) → new units, no adapter	Openings (inside)	Ver.
OUTSIDE 79-7/8 × 76-5/8	Rheem/Ruud [LEGACY] RXPK-C12	(-)PDC-075, (-)PDC-100/101 (legacy) (T; 1990s–early 2000s)	S not on file R not on file	✗
OUTSIDE 80-1/16 × 79-5/16	Rheem/Ruud [LEGACY] RXRK-E54	(-)RGF-200075, (-)RGG/(-)REG/(-)RCG-075, (-)RGF/(-)REF/(-)RCF-085 & -100, (-)RGG/(-)REG/(-)RCG-100 (legacy 6-10T) (T; 1990s–early 2000s) Model prefixes: ICP: RGG	S not on file R not on file	✗
OUTSIDE 80-9/16 × 60-3/4	Carrier/Bryant/ICP [LEGACY] 307175-102	Bryant 579D 7.5 T (7.5 T T;) Model prefixes: Bryant: 579D (7.5 T)	S not on file R not on file	✗
OUTSIDE 80-5/8 × 50-1/2	York/JCI [LEGACY] 1RC0470 (8 in) / 1RC0471 (14 in)	Predator DM/DH/DJ/BP 078-150 (2003-2010, R-22/R-410A) - this footprint started with Predator ~2003; reused by ZF/ZR/ZS/ZH/ZJ/XP, ZT/ZB, Sun Pro ZF (2020), KT/KB R-454B (2024) (3-12.5 (6.5-12.5 on older Predator) T; 2003–now) → York ZF/ZJ/ZR/ZS/ZH, Sun Pro ZF, ZT/ZB and R-454B KT/KB 7.5–12.5T — same curb, no adapter Model prefixes: York: DF (6.5-10 T), DH (6.5-12.5 T), DJ (12.5 T), DM (6.5-12.5 T), DR (7.5-12.5 T), BP (6.5-12.5 T), ZF (6.5-12.5 T), ZH (3-12.5 T), ZJ (3-12.5 T), ZR (3-12.5 T), ZT (3-12.5 T), ZB (6.5-12.5 T), XP (6.5-12.5 T) · York (Coleman/Luxaire): ZS (6.5-12.5 T), ZU (3-12.5 T), ZW (3-12.5 T), ZV (3-12.5 (ZV-A3 to ZV-12 UHE) T), ZK (3-12.5 T), BA (6.5-12.5 T)	S 20 x 30 (curb duct frame) R 20 x 30 (curb duct frame)	✓
OUTSIDE 81 × 64	Trane/American Standard [LEGACY] (factory curb part unknown)	Trane BTC 7.5-10 T; Trane BYC 7.5-10 T; Trane BWC 7.5-10 T (7.5-10 T T;) Model prefixes: Trane: BTC (7.5-10 T), BYC (7.5-10 T), BWC (7.5-10 T)	S not on file R not on file	✗
OUTSIDE 81-5/8 × 62-3/4	Trane/American Standard [LEGACY] (factory curb part unknown)	Trane BWC 12.5 T (12.5 T T;) Model prefixes: Trane: BWC (12.5 T)	S not on file R not on file	≈
OUTSIDE 81-3/4 × 59-3/8	Carrier/Bryant/ICP [LEGACY] 389004-201	Bryant 580B 7.5-10 T; Bryant 558B 7.5-10 T; Bryant 548B 7.5-10 T (7.5-10 T T;) Model prefixes: Bryant: 580B (7.5-10 T), 558B (7.5-10 T), 548B (7.5-10 T)	S not on file R not on file	✗
OUTSIDE 83 × 64-1/2	Trane/American Standard [LEGACY] (factory curb part unknown)	Trane SPCB 12.5 T (cabinet C12) — per curb-maker sheet; SPCA/SPCC/SACB C12 per the atlas listing only (12.5 T T; 1980s–1990s) Model prefixes: Trane: SPCA (12.5 T), SPCB (12.5 T), SPCC (12.5 T)	S not on file R not on file	✗
OUTSIDE 84-1/8 × 51	Carrier/Bryant/ICP [LEGACY] (factory curb part unknown) ⚠ twin: Trane BAYCURB043A	ICP PGD 090-120 (7.5-10 T) — per curb-maker sheet (7.5-10 T T; 1980s–2000s) Model prefixes: ICP: PGD (7.5-10 T)	S not on file R not on file	✗
OUTSIDE 84-7/16 × 60-5/8	Carrier/Bryant/ICP [LEGACY] 70849DA2 ⚠ twin: Trane BAYCURB044A	Bryant 579C 7.5-12.5 T; Bryant 559C 7.5-12.5 T; Bryant 599C 7.5-12.5 T (7.5-12.5 T T;) Model prefixes: Bryant: 579C (7.5-12.5 T), 559C (7.5-12.5 T), 599C (7.5-12.5 T)	S not on file R not on file	✗

OUTSIDE L × W	Brand / curb part	Fit units (tons, years) → new units, no adapter	Openings (inside)	Ver.
OUTSIDE 84-1/2 × 50-3/8 2nd outside (on drawing): 83-7/8 × 49-7/8	Trane/American Standard [LEGACY] BAYCURB043A / BAYCURB043* (current equivalent FIACURB402*/802* for new Precedent B cabinet) ⚠ twin: Carrier 7.5-10 T T curb	T*C072A-120A, TSC072-120B, Y*C072-120A, WSC072-120A, WSC072-090B, YSC072-120B and the 5-ton heat pump WSC060E (c.2004-2010); continued for Precedent C/D cabinets T/YSC072-120H, T/YHC047-102, T/YZC048-120; SAME FOOTPRINT reused by FIACURB402*/802* (Precedent B cabinet, 2025, 14/18 in); ACC-SVN43N (2020) p1 also lists T/YHC048-060F, T/YHC072-102F, WSC060-120H, D/WHC048-102H (6-10 T; ~2004–now) → Trane Precedent 6–10T (T/YSC, T/YHC, T/YZC); new Precedent B cabinet uses FIACURB402/802, same footprint Model prefixes: Trane: YSC (6-10 T), YHC (4-8.5 T), YZC (4-10 T), YSJ (6-10 T), YHJ (6-10 T), YSK (6-10 T), YHK (4-10 T), YZK (3-8.5 T), TSC (6-10 T), THC (4-8.5 T), TZC (4-10 T), TSJ (6-10 T), THJ (6-10 T), TSK (6-10 T), THK (4-10 T), TZK (3-8.5 T), WSC (5-10 T), WHC (4-8.5 T), DHC (4-8.5 T), WSK (6-10 T), WHK (3-8.5 T), DSK (6-8.5 T), DHK (3-8.5 T) · American Standard: YSC (6-10 T), YHC (4-8.5 T)	S 34.375 x 18.5 R 34.375 x 18.25	✓
OUTSIDE 85-1/8 × 59-5/8	Lennox [LEGACY] RMF11-135 roof mounting frame (double duct opening) ⚠ twin: Trane BAYCURB044A	Lennox CHA11 10 T; Lennox CHP11 10 T (10 T T;) Model prefixes: Lennox: CHA11 (10 T), CHP11 (10 T)	S 16.8125 (along length) x 53.875 (across) R 14.3125 (along length) x 53.875 (across)	✓
OUTSIDE 85-1/2 × 52-3/8	Daikin/Goodman/Amana [LEGACY] Rebel standard roof curb – medium cabinet (P/N not printed)	Daikin Applied Rebel DPS007-015 (7-15T) (7-15 T; c.2009-now (span not stated in doc))	S 34.88 x 30.5 R 48.38 x 13.5 (full inside width; width not dimensioned separately)	≈
OUTSIDE 86-1/4 × 54-1/4	Lennox [LEGACY] Roof mounting frame with double duct opening, LGB/LGE120H (14 in); catalog number not printed ⚠ twin: Rheem RXKG-DDD14, Lennox 11F72	LGB120H/S (c.2000-2004), LGE120H4 / LCE120 (2004-c.2010) (10 T; 2000-c.2010) → Strategos SGH/SCH/SHH 120 (11F72/11F73: 86-1/4 x 53-7/8, same openings). Lennox tech-library PDF. Model prefixes: Lennox: LGB (10 T), LGE (10 T), LCB (10 T), LCE (10 T)	S 22 x 30 R 16.375 x 42	✓
OUTSIDE 86-3/4 × 47-3/4	Lennox [LEGACY] RMF3-95	Lennox GCS3 7.5-8 T; Lennox CHA8 7.5-8 T (7.5-8 T T;) Model prefixes: Lennox: GCS3 (7.5-8 T), CHA8 (7.5-8 T), CHP8 (7.5-8 T)	S 16 (along length) x 34 1/8 (across) R 16 (along length) x 34 1/8 (across)	✓
OUTSIDE 87-1/8 × 46-5/8	Lennox [LEGACY] RMF16-09 ⚠ twin: Lennox RMF16-95	GCS16-072/090 (1990s-2000s) (6-7.5 T; 1980s–2000s) Model prefixes: Lennox: GCS16 (6-7.5 T)	S 17.9375 x 31.5 R 17.9375 x 31.5	✓
OUTSIDE 87-1/8 × 46-5/8	Lennox [LEGACY] RMF16-95 (double duct opening; also with SRT16-95 ceiling-diffuser transitions) ⚠ twin: Lennox RMF16-09	GCS24-953 (7.5 ton gas/electric, mid-1990s; CHA24/CHP24 7.5T presumed same cabinet) (7.5 T; c.1994-2000 (GCS24, bulletin 12/1996)) Model prefixes: Lennox: GCS24 (7.5 T), CHA24 (7.5 T), CHP16 (7.5 T)	S 17.9375 x 31.5 R 17.9375 x 31.5	✓
OUTSIDE 88-9/16 × 53-3/8	Rheem/Ruud [LEGACY] RXKG-CAE14 / RXKG-CAE24 ⚠ twin: Rheem RXKG-BAE14, Lennox 10Z25	RKKL-B 7.5, 10, 12.5T (Classic/Value series, c.2008-2018) (7.5-12.5 T; 2010s) → Rheem/Ruud 7.5–12.5T on this curb Model prefixes: Rheem/Ruud: RLKB (7.5-15 T), RLMB (7.5-12.5 T), RLNB (7.5-10 T), RKKL (7.5-12.5 T), RKNL (6-12.5 T), RKRL (7.5-10 T), RLKL (7.5-12.5 T), RLNL (7.5-12.5 T), RLRL (7.5-10 T), RJNL (7.5-10 T)	S not on file R not on file	✓
OUTSIDE 88-9/16 × 53-1/2	Rheem/Ruud [LEGACY] RXKG-BAE14 / RXKG-BAE24 ⚠ twin: Rheem RXKG-CAE14, Lennox 10Z25	RKKB, RKMB, RKNB 7.5-12.5T (Classic, c.2004-2008) (7.5-12.5 T; ~2004–2010) → Rheem/Ruud 7.5–12.5T RKKL-B era on RXKG-CAE (within ⅛") Model prefixes: Rheem/Ruud: RKKB (7.5-12.5 T), RKMB (7.5-12.5 T), RKNB (7.5-12.5 T), RLKB (7.5-15 T), RLMB (7.5-12.5 T), RLNB (7.5-10 T)	S 29.75 x 24 (REF, along length x across width) R 41.0625 x 20.8125 (REF, across width x along length)	✓

OUTSIDE L × W	Brand / curb part	Fit units (tons, years) → new units, no adapter	Openings (inside)	Ver.
OUTSIDE 89-1/4 × 59-7/16	Trane/American Standard [LEGACY] BAYCURB025*	Voyager YCD/YCH, TCD/TCH (and WCD) 100B, 102B, 103C, 120B, 125C, 150B (IOM table also lists YC*150C) (8.3-12.5 T; c.1990-1999) Model prefixes: Trane: YCD (8.3-12.5 T), YCH (8.3-12.5 T), TCD (8.3-12.5 T), TCH (8.3-12.5 T), WCD (10 T), WCH (10 T)	S 24.5 x 47.4375 R 19.125 x 47.4375	✓
OUTSIDE 92-1/2 × 58-1/2	Lennox [LEGACY] RMF16-12	GCS16-120/150 (10-12.5 T; 1980s–2000s) Model prefixes: Lennox: GCS16 (10-12.5 T), CHP16 (10-12.5 T), GHP16 (10 T)	S 25.25 x 31.5 R 25.25 x 31.5	✓
OUTSIDE 93 × 63-1/4	York/JCI [LEGACY] unknown (legacy Sunline 2000 7.5-12.5 ton curb) ⚠ twin: York 1RC0472	York/Coleman/Luxaire Sunline 2000 D*CG, D*CE, D*HE, D*HG, D*EE, D*EG, D*HB, D*UC, D*HC, D*US and B*CH/B*HN 090-150 (7.5-12.5 T, 1990s-early 2000s, incl. D1/D2/D3/D4/D7 CG/CE 60 Hz) - the curb York's 1RC0472 transition adapts (7.5-12.5 T; 1990s–early 2000s) → None direct — York 1RC0472 transition curb puts a Predator/Sun Pro/ZF 7.5–12.5T on it Model prefixes: York: D1CG (7.5-12.5 T), D2CG (7.5-12.5 T), D3CG (7.5-12.5 T), D4CG (7.5-12.5 T), D6CG (7.5-12.5 T), D7CG (7.5-12.5 T), D8CG (7.5-12.5 T), D9CG (7.5-12.5 T), D1CE (7.5-12.5 T), D3CE (7.5-12.5 T), D4CE (7.5-12.5 T), D5CE (7.5-12.5 T), D6CE (7.5-12.5 T), D1EE (7.5-12.5 T), D1EG (7.5-12.5 T), D2HE (7.5-12.5 T), D2HG (7.5-12.5 T), D3HE (7.5-12.5 T), D3HG (7.5-12.5 T), B1CH (7.5-12.5 T), B2CH (7.5-12.5 T), B3CH (7.5-12.5 T), B4CH (7.5-12.5 T), B5CH (7.5-12.5 T), B6CH (7.5-12.5 T), B7CH (7.5-12.5 T), B1HN (7.5-12.5 T)	S 16 x 23-3/4 R 20-1/2 x 23-3/4	✓
OUTSIDE 94-1/2 × 77-1/2	Nordyne [LEGACY] 559538 / 559539 / 559540 / 559541 (8/14/18/24 in; RSI 47-201-1108/1114/1118/1124) ⚠ twin: Nordyne 559542	R6GN 150/180 (gas/electric, high efficiency) (12.5-15 T; approx 2009-2015 (form 122D-0109)	S 21 x 74 (duct 73.5 x 20.5) R 17.5 x 74 (duct 68.5 x 17.25)	✓
OUTSIDE 94-1/2 × 77-1/2	Nordyne [LEGACY] 559542 (horizontal, 24 in) / 559543 (horizontal w/ supply duct, 24 in) ⚠ twin: Nordyne 559538	R6GN 150/180 (12.5-15 T; approx 2009-2015 (form 123D-0109))	S side opening 65.5 x 18 (duct 66 x 18.5), horizontal out the curb side R horizontal return via unit return panel kit 919251 (not through curb)	✓
OUTSIDE 94-7/8 × 50-7/8	Rheem/Ruud [LEGACY] 547860 / 547861 / 547862 / 547863	R4G* / P4S* 090-120 (7.5-10 T; 2000s–2010s)	S 21 x 32.5 R 21 x 32.5	✓
OUTSIDE 95-3/8 × 54-1/4	Lennox [LEGACY] LARMF10/15S-14 / -18 / -24 (Cliplock 1000); LARMF10/15-14 / -24 (standard); C1CURB40B(-1) 8 in ⚠ twin: Lennox C1CURB70B-1 11F54	L Series LGA/LCA 090-150 (LC 7.5-12.5) AND T-Class TG/TC/TH 090-150 (2000s); same footprint as later K-series/Energence 7.5-12.5 hybrid curbs (lennoxpros lists 54-1/4 x 95-3/8 for Z1CURB40B-1) (7.5-12.5 T; ~1996–2010) → Lennox K-series KGA/KCA 092–150, Enlight LGT/LCT, Xion LGX/LCX 7.5–12.5T share the 95⅜ × 54¼ OUTSIDE only — openings differ (up to ~5¼"), so plan an adapter or measure openings Model prefixes: Lennox: LGA (7.5-12.5 T), LCA (7.5-12.5 T), LHA (7.5-12.5 T), TGA (7.5-12.5 T), TCA (7.5-12.5 T), THA (7.5-12.5 T) · Allied Commercial: TGA (7.5-12.5 T), TCA (7.5-12.5 T)	S 21.5 x 30.5 R 21.5 x 31.125 (31.375 on cliplock drawing)	✓
OUTSIDE 95-7/8 × 43-7/8	Lennox [LEGACY] LARMF08/10-14 / LARMF08/10-24 (double duct opening)	L Series LCA/LGA/LHA 088 and 100 "A+ box" (7.5-8.5 ton), first gen, late 1990s (7.5-8.5 T; c.1997-2003) Model prefixes: Lennox: LGA (7.5-8.5 T), LCA (7.5-8.5 T), LHA (7.5-8.5 T)	S 16.5 x 30.5 R 16.5 x 31.125	✓
OUTSIDE 96-5/16 × 57-7/16	Carrier/Bryant/ICP [LEGACY] CRRFCURB031A00 (14 in) / CRRFCURB033A00 (24 in)	Carrier 48/50PG 08-14 (c.2004-2012) (7.5-12.5 T T; 2004-c.2012)	S 22.5 x ~53.7 (split by 3 in center support: 29.25 + 3 + 21.44) R 17.125 x 35.5 (inside)	✓

OUTSIDE L × W	Brand / curb part	Fit units (tons, years) → new units, no adapter	Openings (inside)	Ver.
OUTSIDE 102-1/4 × 67 2nd outside (on drawing): 101-7/8 × 66-5/8	Trane/American Standard [LEGACY] BAYCURB026B	Voyager II T/YSD150F (12.5T); per Trane 'only two curbs for entire Voyager 12.5-25 line' | ALSO: Voyager R-22 YCD/YCH (and TCD/TCH/WCD cooling/HP equivalents) 150D, 151C, 180B, 210C (catalog groups: 12.5T high-eff; 12.5, 15, 17.5T standard-eff), c.1998-2004; also YC*121C, 155B, 175C (1998 IOM YC-IOM-4G p7 Fig 1A row "YC*121C-151C, 155B, 175C, 180B, 210C": J=102-1/4, H=67, top 101-7/8 x 66-5/8) | ALSO Voyager R-410A TCD/YCD150E (2006 catalog p.49) and TCD/YCD150F (RT-PRC028-EN Nov 2011 p.117): same 102-1/4 x 67 curb (12.5 T; c.1996–now) Model prefixes: Trane: YCD (10-17.5 T), YCH (10-17.5 T), YSD (12.5 T), YSH (12.5 T), YHD (12.5 T), YHH (12.5 T), TCD (10-17.5 T), TCH (10-17.5 T), TSD (12.5 T), TSH (12.5 T), THD (12.5 T), THH (12.5 T), WCD (12.5-15 T), WCH (12.5-15 T), WSD (12.5-20 T), WSH (12.5-20 T) · American Standard: YSD (12.5 T), YSH (12.5 T), YHD (12.5 T), YHH (12.5 T)	S 28.5 x 55.5 R 20.875 x 55.5	✓
OUTSIDE 102-1/2 × 61-1/4	Trane/American Standard [LEGACY] (factory curb part unknown)	Trane BTC 7.5-10 T; Trane BYC 7.5-10 T; Trane BWC 7.5-10 T — C and D revisions only (F revision = row 140), per ProVent TRN04 (7.5-10 T T;) Model prefixes: Trane: BTC (7.5-10 T), BYC (7.5-10 T), BWC (7.5-10 T)	S not on file R not on file	≈
OUTSIDE 102-5/8 × 41-5/8	Lennox [LEGACY] RMFG11-95 (RMFGH11-95 horizontal)	Lennox GCS11 7.5-8 T (7.5-8 T T;) Model prefixes: Lennox: GCS11 (7.5-8 T)	S 24 1/4 (along length) x 32 7/8 (across) R 14 1/4 (along length) x 35 7/8 (across)	✓
OUTSIDE 106-1/4 × 56-3/4	Lennox [LEGACY] RMF3-135	Lennox GCS3 10-11 T; Lennox CHA8 10-11 T (10-11 T T;) Model prefixes: Lennox: GCS3 (10-11 T), CHA8 (10-11 T), CHP8 (10-11 T)	S 20 (along length) x 40 (across) R 20 (along length) x 40 (across)	✓
OUTSIDE 108-1/8 × 59-5/8	Lennox [LEGACY] RMFG11-135 (RMFGH11-135 horizontal) ⚠ twin: Lennox RMF11-185	Lennox GCS11 10-11 T (10-11 T T;) Model prefixes: Lennox: GCS11 (10-11 T)	S 24 1/4 (along length) x 47 7/8 (across) R 14 1/4 (along length) x 53 7/8 (across)	✓
OUTSIDE 114-7/16 × 78-5/8	Carrier/Bryant/ICP [LEGACY] CRRFCURB018B00 (14 in) / CRRFCURB019B00 (24 in) ⚠ twin: Carrier CRRFCURB018C00	Carrier 48HG/50HG 014-028 (WeatherMaker, gas/electric & electric/electric, 48HGD/E/F/K/L/M) (12.5-25 T T; c.2000-2006 (drawing 50TG500546 dated 04/25/01)) → base curb part 018 reused for Carrier 48PG 20-28 (CRRFCURB018C00/019C00, see PG28 row	S 21.625 x ~75 (supply opening curb band); unit supply opening 19.625 R 21.1875 x ~75 (return opening curb band); unit return opening 21.5625	✓
6–12.5 TON — CURRENT / RECENT				

OUTSIDE L × W	Brand / curb part	Fit units (tons, years) → new units, no adapter	Openings (inside)	Ver.
OUTSIDE 81-3/4 × 53-1/2 2nd outside (on drawing): 78-1/4 × 50	Carrier/Bryant/ICP CRRFCURB003A01 (14 in) / CRRFCURB004A01 (24 in) ⚠ twin: York 1RC0457, Trane BAYCURB310*, Carrier CRRFCURB003A00	Carrier 48TC 08-14; 48HC 07-12; legacy 48HJ008-014; Bryant 580J 08-14 | ALSO Carrier 50TCQ D08/D09/D12 heat pump 7.5-10 T (50TCQ-07PD p.30 Fig 9, p.34 Fig 14) and ICP RHS090/102/120 (ICP RHS p.28, p.32): same CRRFCURB003A01/004A01, drawn 6'-6 x 4'-1 3/4 (= alt outline within 1/4). 50TCQ14 / RHS150 use a different curb (CRRFCURB072A00) (7.5-12.5 T T; ~2010–now) → Carrier 48TC 08–14, 48HC, Bryant 580J · York Sun Core 6.5–12.5T (same outside & supply; check return) Model prefixes: Carrier: 50HJQ (6-10 T), 48TC (7.5-12.5 T), 48HC (6-10 T), 48LC (6 T), 48FC (7.5-12.5 T), 50TC (7.5-12.5 T), 50HC (6-10 T), 50LC (6 T), 50FC (7.5-12.5 T), 50TCQ (7.5-10 T), 50HCQ (6-7.5 T), 50FCQ (7.5-10 T), 50GCQ (6-7.5 T), 48FE (7.5-12.5 T), 50FE (7.5-12.5 T), 50FEQ (7.5-10 T), 48GE (6-10 T), 50GE (6-10 T), 50GEQ (6-7.5 T), 48WE (6 T), 50WE (6 T), 48QE (6-7.5 T) · Bryant: 580C (7.5-12.5 T), 580D (7.5-12.5 T), 581A (7.5-12.5 T), 581B (7.5-12.5 T), 551A (7.5-12.5 T), 551B (7.5-12.5 T), 558C (7.5-12.5 T), 558D (7.5-12.5 T), 548C (7.5-12.5 T), 548D (7.5-12.5 T), 548F (7.5-12.5 T), 549B (7.5-12.5 T), 580J (7.5-12.5 T), 581J (6-10 T), 558J (7.5-12.5 T), 551J (6-10 T), 559J (7.5-12.5 T), 548J (7.5-12.5 T), 549J (6-10 T), 581K (6-12.5 T), 551K (6-12.5 T), 549K (6-10 T), 559K (7.5-12.5 T), 581L (6-10 T), 551L (6-10 T), 549L (6-10 T), 549Q (6-10 T) · ICP: PGE (7.5-12.5 T), PGH (7.5-12.5 T), PAE (7.5-12.5 T), PAH (7.5-12.5 T), PHS (7.5-12.5 T), PHH (7.5-12.5 T), RGS (7.5-12.5 T), RAS (7.5-12.5 T), RHS (7.5-10 T), RGH (6-10 T), RAH (6-10 T), RHH (6-10 T), RGV (7.5-12.5 T), RAV (7.5-12.5 T), RHV (7.5-12.5 T), RGF (7.5-12.5 T), RAF (7.5-12.5 T), RHF (7.5-12.5 T), RAG (6-10 T), RHG (6-8.5 T)	S 15.81 (along length) x 31.53 (across) R 15.47 (across, 15 15/32) x 40.19 (along length, 40 3/16)	✓
OUTSIDE 81-3/4 × 53-1/2	York/JCI 1RC0457 (14 in) / 1RC0459 (24 in) ⚠ twin: Carrier CRRFCURB003A01, Carrier CRRFCURB003A00, Trane BAYCURB310*	Sun Core / Select large footprint: ZX08-14, ZY07-12, ZYA7, ZL08-14; ZM06-08; R-454B WYEA7, WYE08, WXE08-12 (6.5-12.5 T; 2010s–now) → York Sun Core 6.5–12.5T (current curb) · Carrier 48TC 08–14 (Carrier-pattern; check return) Model prefixes: York: ZX (7.5-12.5 T), ZY (6-10 T), ZL (7.5-12.5 T), ZXG (7.5-12.5 T), ZXE (7.5-12.5 T), ZYG (6-10 T), ZYE (6-10 T), XX (7.5-10 T), XY (6-8.5 T)	S 15.813 x 31.531 R 40.188 x 15.469	✓
OUTSIDE 81-7/8 × 53-5/8 2nd outside (GDK/EDK 2026 catalog): 84-13/16 × 54-9/16	Trane/American Standard BAYCURB310* ⚠ twin: Carrier CRRFCURB003A00, Carrier CRRFCURB003A01, York 1RC0457	Foundation (medium) EBC/GBC 090-150 (c.2021+) | ALSO Foundation K-gen GDK/EDK 090-150 (2026): same part no. BAYCURB310*, but Trane's May 2026 catalog draws a larger curb, 84-13/16 x 54-9/16 (second size). Tape-check which curb is on the roof. (7.5-12.5 T; 2021-now) Model prefixes: Trane: GBC (7.5-12.5 T), GDK (7.5-12.5 T), EBC (7.5-12.5 T), EDK (7.5-12.5 T) · American Standard: GBC (7.5-12.5 T)	S 15.688 x 31.375 R 15.313 x 40.063 (reading of iso drawing)	✓
OUTSIDE 84-1/2 × 60-3/8 2nd outside (on drawing): 83-7/8 × 59-7/8	Trane/American Standard BAYCURB044A / BAYCURB044* ⚠ twin: Carrier 70849DA2, Lennox RMF11-135 roof mounting frame	Precedent E cabinet: T/YHC092-120E (c.2008+), T/YHC120F, T/YZC120, WSC120E; ACC-SVN43N (2020) p1 lists T/YHC120F, T/YZC120, D/WHC120H (7.5-10 (high eff.) T; ~2008–now) → Trane Precedent high-eff 7.5–10T (T/YHC, T/YZC) — same curb Model prefixes: Trane: YHC (7.5-10 T), YZC (10 T), YSJ (12.5 T), YHJ (12.5 T), YSK (12.5 T), YZK (10 T), THC (7.5-10 T), TZC (10 T), TSJ (12.5 T), THJ (12.5 T), TSK (12.5 T), TZK (10 T), WHC (10 T), DHC (10 T), WHK (10 T) · American Standard: YHC (7.5-10 T)	S 34.375 x 18.5 R 34.375 x 18.5	✓
OUTSIDE 85-3/8 × 53-1/2	Rheem/Ruud RXKG-DDD14 / RXKG-DDD24 (also RXKG-DD14/DD24; welded RXKG-SD14/SD24) ⚠ twin: Lennox 11F72, Lennox Roof mounting frame with double duct opening, LGB/LGE120H	RACD Renaissance 7.5-12.5T (R-454B, current) | ALSO Ruud RHPDZT heat pump 7.5-10 T (RHPD product data p.61) (7.5-12.5 T; current) → Rheem Renaissance 7.5–12.5T (current curb) Model prefixes: Rheem/Ruud: RGED (7.5-12.5 T), RACD (7.5-12.5 T), RHPD (7.5-10 T)	S 15.3125 x 31 R 15 x 39.75	✓

OUTSIDE L × W	Brand / curb part	Fit units (tons, years) → new units, no adapter	Openings (inside)	Ver.
OUTSIDE 86-1/4 × 53-7/8	Lennox 11F72 (14 in) / 11F73 (24 in) hybrid downflow ⚠ twin: Rheem RXKG-DDD14, Lennox Roof mounting frame with double duct opening, LGB/LGE120H	Strategos SGH/SCH/SHH/SDH 120 (10 T; c.2019-now) → Strategos SGH/SCH/SHH 120 fits LGB/LGE120 frames (dimensions match within 3/8 in Model prefixes: Lennox: SGC (10 T), SCC (10 T), SGH (10 T), SCH (10 T)	S 22 x 30 R 16.375 x 42	✓
OUTSIDE 88-1/16 × 54-9/16	Daikin/Goodman/Amana 0270L02690MC (14 in) / 0270L02691MC (24 in) (Micro Metl 0270L01153 / 0270L01154) = IOD-7122 7.5-12.5T curb	Daikin DR*/DF* 090-150 AND R-32 DSC/DSG/DSH, DHC/DHG/DHH 090-150 (93-3/4 x 60-3/8 cabinet) | ALSO Daikin DBC/DBG/DBH 090-150 (IOD-7122 Nov 2019 p.2) (7.5-12.5 T; 2019-now) → Daikin R-32 DSC/DSG/DSH and DHC/DHG/DHH 7.5-12.5T Model prefixes: Daikin: DFG (7.5-12.5 T), DFC (7.5-12.5 T), DFH (7.5-12.5 T), DRG (7.5-12.5 T), DRC (7.5-12.5 T), DSG (7.5-12.5 T), DSC (7.5-12.5 T), DSH (7.5-12.5 T), DHG (7.5-12.5 T), DHC (7.5-12.5 T)	S 17.276 x 30.111 R 17.611 x 43.75	✓
OUTSIDE 89-3/8 × 54-1/8	Lennox 10Z25 (8 in) / 10Z26 (14 in) / 10Z27 (18 in) / 10Z28 (24 in) hybrid downflow (Z1CURB40B-1 model number is not printed in either cited source) ⚠ twin: Rheem RXKG-BAE14, Rheem RXKG-CAE14	Raider ZGA/ZGB/ZCA/ZCB/ZHC 092-150 (7.5-12.5 ton, 2020+) and Raider ZGD/ZCD (R-454B, 2025+) | ALSO: Z-Series ZGD/ZCD 090-150, ZHD 090-120 (R-454B) (7.5-12.5 T; 2020-now) Model prefixes: Lennox: ZGA (7.5-12.5 T), ZGB (7.5-12.5 T), ZGC (7.5-12.5 T), ZGD (7.5-12.5 T), ZCA (7.5-12.5 T), ZCB (7.5-12.5 T), ZCC (7.5-12.5 T), ZCD (7.5-12.5 T), ZHC (7.5-12.5 T), ZHD (7.5-10 T) · Allied Commercial: ZGA (7.5-12.5 T), ZCA (7.5-12.5 T)	S 16 x 29 R 16.5 x 40	✓
OUTSIDE 92-1/4 × 53-1/4	Daikin/Goodman/Amana 14CURB90150 (14 in) - Daikin DCC/DCG & Goodman CPC/CPG 090-150 full-perimeter curb	Daikin DCC/DCG 7.5-12.5T; Goodman CPG/CPC 090-150 | ALSO: Goodman CPC/CPG/CPH 090-150; Daikin DCC/DCG/DCH 090-150 (7.5-12.5 T; 2010s–now) → Daikin DCC/DCG and Goodman CPG/CPC 7.5–12.5T Model prefixes: Daikin: DCG (7.5-12.5 T), DCC (7.5-12.5 T), DCH (7.5-12.5 T) · Goodman/Janitrol: CPG (7.5-12.5 T), CPC (7.5-12.5 T), CPH (7.5-12.5 T)	S 15.375 x 31.125 R 38.375 x 14.625	✓
OUTSIDE 92-3/4 × 41-1/2	Lennox K1CURB70AP1 / 71AP1 / 72AP1 / 73AP1 (full perimeter, 8/14/18/24)	KGA/KCA 090 (7.5 ton in A-box cabinet) (7.5 T; 2014–2023) Model prefixes: Lennox: KGA (7.5 T), KCA (7.5 T) · Allied Commercial: KGA (7.5 T), KCA (7.5 T)	S 21.125 x 19.125 R 32 x 15.125	✓
OUTSIDE 94 × 64-1/4	York/JCI 1RC0472 (transition curb Sunline to Predator) ⚠ twin: York unknown	Adapter: puts Predator/Sun Pro 7.5-12.5 (80-5/8 x 50-1/2 top) on legacy Sunline 2000 7.5-12.5 curb (7.5-12.5 T; adapter) → York Predator/Sun Pro/ZF 7.5–12.5T (that is what this transition curb is for)	S not on file R not on file	✓
OUTSIDE 95-3/8 × 54-1/4	Lennox C1CURB70B-1 (8) 11F54 / C1CURB71B-1 (14) 11F55 / C1CURB72B-1 (18) 11F56 / C1CURB73B-1 (24) 11F57 ⚠ twin: Lennox LARMF10/15S-14	K-Series KCA/KCB/KGA/KGB/KHA 092-150 (Landmark, 2014-2023); SAME curbs (11F54-57) listed for Enlight LCT/LGT and Xion LCX/LGX 092-150 (R-454B, 2024) | ALSO Lennox Enlight LHT078/092/102/120/152 heat pump, R-454B (EHB LHT B-box 2026-03 p.43 hybrid curb, 95-3/8 x 54-1/4) (7.5-12.5 T; 2014–now) → Lennox K-series, Enlight LGT/LCT, Xion LGX/LCX 7.5–12.5T Model prefixes: Lennox: LGH (7.5-12.5 T), LCH (7.5-12.5 T), KGA (7.5-12.5 T), KGB (7.5-12.5 T), KGC (7.5-12.5 T), KCA (7.5-12.5 T), KCB (7.5-12.5 T), KCC (7.5-12.5 T), KHA (7.5-12.5 T), KHB (7.5-12.5 T), KHC (7.5-10 T), LGM (7.5-12.5 T), LCM (7.5-12.5 T), LGT (7.5-12.5 T), LCT (7.5-12.5 T), LHT (6.5-12.5 T), LGX (7.5-12.5 T), LCX (7.5-12.5 T), LHX (7.5-10 T) · Allied Commercial: KGA (7.5-12.5 T), KCA (7.5-12.5 T), LGX (7.5-12.5 T), LCX (7.5-12.5 T), LHX (7.5-10 T)	S 29.75 x 21.75 R 26.75 x 29.75	✓
OUTSIDE 121-5/8 × 80-5/8 2nd outside (ProVent CBKDSAV1518 replacement curb O.D. (unverified)): 121-1/8 × 80-1/8	York/JCI 1RC0443 (14 in) / 1RC0446 (24 in) ⚠ twin: Carrier CRRFCURB045A00	Sun Choice AV15, AV18 (R-410A, 2019-2024); HV13 (R-410A 12.5T, 2022-); WV13 (R-454B 12.5T, 2024-); KV15/KV18 (per existing row) (12.5-17.5 T; 2019-now (Sun Choice AV/HV/WV/KV)) → all current Sun Choice WV/KV of this size Model prefixes: York: AV (15-17.5 T), AD (15-17.5 T), AH (15 (size 15) T), AL (15 (size 15) T), HV (12.5 T)	S 27.88 x 63.88 R about 44 x 69.44 (whole return section, split by one center duct support rail; 22.19 is the printed bay to that rail)	✓

OUTSIDE L × W	Brand / curb part	Fit units (tons, years) → new units, no adapter	Openings (inside)	Ver.
12.5–30 TON — LEGACY				
OUTSIDE 74-1/4 × 67-1/16 2nd outside (ProVent existing O.D.): 77-3/4 × 70-9/16	Carrier/Bryant/ICP [LEGACY] 50PQ900221 (14 in) / 50PQ900141 (24 in); later numbers CRRFCURB010A00 (14) / CRRFCURB011A00 (24) ⚠ twin: Nordyne 555617, Nordyne 555631	Carrier 48TJ016-028 (standard heat), legacy 1990s-2000s; also 48TM016-028 era (15-25 T T; 1990s–2000s) Model prefixes: Carrier: 48DP (10-20 T), 48DR (10-20 T), 48TJ (15-25 T), 48TM (15-20 T), 50DP (10-20 T), 50TJ (15-25 T), 50TM (15-25 T), 50PQ (10-20 T), 50HJQ (12.5-15 T) · Bryant: 579E (20-25 T), 579F (15-25 T), 559F (15-25 T)	S 19.81 (along unit length, dim B 1'-7 13/16) x full inside width R 22.75 (along unit length, 1'-10 3/4) x full inside width	✓
OUTSIDE 77-1/2 × 70-9/16	Nordyne [LEGACY] 555617 / 555618 / 555619 / 555620 ⚠ twin: Carrier 50PQ900221, Nordyne 555631	R4GM 150-180 (12.5-15 T; 2000s–2010s)	S 73.5 x 20.5 R 68.5 x 17.25	✓
OUTSIDE 77-3/4 × 75-9/16	Carrier/Bryant/ICP [LEGACY] AXB060CMA (14 in) / AXB060CHA (24 in); horizontal-discharge AXB065CHA / AXB165CHA (24 in)	ICP PGE 180, 240 commercial gas/electric (c.2002-2008, ASHRAE 90.1-2001 era); likely PAE 180/240 same cabinet (unverified) (15-20 T T; c.2002-2008) Model prefixes: ICP: PGE (15-20 T), PAE (15-20 T)	S 19.8125 x 74.25 (band across inside width) R 22.75 x 74.25 (band across inside width)	✓
OUTSIDE 86-13/16 × 74-1/4	Carrier/Bryant/ICP [LEGACY] 48DP900041 (14 in) / 48DP900051 (24 in)	Carrier 48TJ024, 028 high-heat only, legacy (20-25 T (high heat) T; 1990s–2000s) Model prefixes: Carrier: 48DP (20-25 T), 48TJ (20-25 T)	S 39.625 (along length, B 3'-3 5/8) x full inside width R 22.75 (along length) x full inside width	✓
OUTSIDE 87-1/8 × 68-5/8	Carrier/Bryant/ICP [LEGACY] 48DD016 curb (factory part # not on file)	Carrier 48DD016 (15 T, older series) (15 T; older series) Model prefixes: Carrier: 48DD (15 T)	S not on file R not on file	**F**
OUTSIDE 89-1/16 × 74-1/4	Carrier/Bryant/ICP [LEGACY] CRRFCURB025A00 (14 in)	Carrier 48TM028 (WeatherMaker, legacy c.1998-2004) (25 T T; c.1998-2004 (48TM028)) Model prefixes: Carrier: 48TM (25 T)	S 19.8125 x ~74 (unit supply opening 1-7 13/16 wide, spans curb width) R 16.3125 x ~74 (unit return opening 1-4 5/16 wide)	✓
OUTSIDE 93-3/8 × 61-1/2	Carrier/Bryant/ICP [LEGACY] (factory curb part unknown)	ICP PGB 150-240 (12.5-20 T) — per curb-maker sheet (12.5-20 T T; 1980s–2000s) Model prefixes: ICP: PGB (12.5-20 T)	S not on file R not on file	✗
OUTSIDE 102-1/8 × 86-1/4	Lennox [LEGACY] LARMF18/36-14 / LARMF18/36-24 (standard); LARMF18/30S-14/-18/-24 (Cliplock 1000, same footprint) ⚠ twin: Lennox C1CURB70C-1 11F58, Lennox Roof mounting frame with double duct opening, LGB/LGE240H, Lennox 11T90	L Series LGA/LCA/LHA 156H, 180, 210, 240, 300S (1990s-2000s); footprint reused by LGH/LCH 156-300 Energence C-box hybrid curb (13-25 T; ~1996–2010) → Lennox Energence LGH/LCH, K-series, Xion, Enlight, Model L 13–25T (same 102 × 86⅛ footprint) Model prefixes: Lennox: LGA (13-25 T), LCA (13-25 T), LHA (13-25 T), TGA (15-20 T), TCA (15-20 T), SGA (20 T), SGB (24 T) · Allied Commercial: TGA (15-20 T), TCA (15-20 T)	S 21 x 61.5 R 16 x 61.5	✓
OUTSIDE 102-3/8 × 69-5/8	Carrier/Bryant/ICP [LEGACY] 70849DA3	Bryant 579C 15 T; Bryant 559C 15 T; Bryant 599C 15 T (15 T T;) Model prefixes: Bryant: 579C (15 T), 559C (15 T), 599C (15 T)	S not on file R not on file	✗
OUTSIDE 102-5/8 × 86-1/4	Lennox [LEGACY] Roof mounting frame with double duct opening, LGB/LGE240H (14 in); catalog number not printed ⚠ twin: Lennox C1CURB70C-1 11F58, Lennox LARMF18/36-14, Lennox 11T90	LGB240H/S (c.2000-2004), LGE240H4 / LCE240 (2004-c.2010) (20 T; 2000-c.2010) Model prefixes: Lennox: LGB (20 T), LGE (20 T), LCB (20 T), LCE (20 T)	S 22 x 62.5 R 16.5625 x 62.5	✓
OUTSIDE 108-1/8 × 59-5/8	Lennox [LEGACY] RMF11-185 (RMFH11-185 horizontal) ⚠ twin: Lennox RMFG11-135	Lennox GCS11 15 T (15 T T;) Model prefixes: Lennox: GCS11 (15 T), CHA11 (15 T), CHP11 (15 T)	S 27 5/8 (along length) x 47 5/8 (across) R 18 5/8 (along length) x 54 1/4 (across)	✓
OUTSIDE 114-1/2 × 80-1/16	Rheem/Ruud [LEGACY] RXRK-E56	(-)RGF/(-)REF/(-)RCF-125 (legacy) (T; 1990s–early 2000s)	S not on file R not on file	✗

OUTSIDE L × W	Brand / curb part	Fit units (tons, years) → new units, no adapter	Openings (inside)	Ver.
OUTSIDE 114-5/8 × 78-5/8 2nd outside (on drawing): 136-3/4 × 78-5/8	Carrier/Bryant/ICP [LEGACY] CRRFCURB018C00 (14 in) / CRRFCURB019C00 (24 in) + EnergyX extension CREXCURB015A00/016A00 ⚠ twin: Carrier CRRFCURB018B00	Carrier 48PG 28 (and by part family 48/50PG 20-28, unverified for 20/24) (20-25 T T; c.2007-2012) → same 018 base curb family as 48/50HG 014-028	S not on file R not on file	≈
OUTSIDE 115-1/8 × 86-1/4	Lennox [LEGACY] LARMF30/36S-14 (54K58) / -18 (54K59) / -24 (54K60) clip full perimeter; S6CURB10121 (30W15, 14 in) / S6CURB11121 (30W16, 24 in) standard full perimeter ⚠ twin: Lennox 11F74, Lennox 11F62	L Series LGC/LCC (gas/electric and cooling) 248/300/360, 21-30 ton (also LHC presumed same cabinet) (21-30 T; c.2002-2012 (L Series 21-30T, bulletin 2011)) → Strategos 240 curb is near-identical outside (115-1/8 x 86-1/8, see row) but its return is 61-1/2 long, not 79-1/2. Lennox tech-library PDF. Model prefixes: Lennox: LGC (21-27 T), LCC (21-27 T), LHC (21-27 T), SGA (20 T), SGB (24 T)	S 21 x 61.5 R 16 x 79.5	✓
OUTSIDE 115-1/4 × 84	York/JCI [LEGACY] 1RC0436 ⚠ twin: Carrier 50DJ/DW024-028 accessory roof curb	Sunline 2000 D2CE/D2CG 180 & 240 (1995 TG 530.18-TG3Y; R-22); confirms the 115-1/4 / 126-1/4 x 84 footprint goes back to mid-1990s Sunline 2000 15/20T (15 T; c.1993-2003 (Sunline 2000 D2CE/D2CG 15-20T, R-22)) → ZF180/ZF210-300, ZJ/ZR 180-300 (per existing 1RC0436/1RC0437 rows Model prefixes: York: D1CG (15 T), D2CG (15 T), D3CG (15 T), D4CG (15 T), D6CG (15 T), D7CG (15 T), D8CG (15 T), D9CG (15 T), D1CE (15 T), D3CE (15 T), D4CE (15 T), D5CE (15 T), D6CE (15 T), B1CH (15 T), B2CH (15 T), B3CH (15 T), B4CH (15 T), B5CH (15 T), B6CH (15 T), B7CH (15 T), DH (15 T), DM (15 T), BP (15 T), ZF (15 T) · York (Coleman/Luxaire): BA (15 T), WW (15 T)	S 22.5 x 35.625 R 32.875 x 35.625	✓
OUTSIDE 116-3/16 × 84	Carrier/Bryant/ICP [LEGACY] 50DJ/DW024-028 accessory roof curb (1987 doc; Carrier accessory no. not legible in drawing) ⚠ twin: York 1RC0436	Carrier 50DJ024-028 / 50DW (electric cooling, 1980s; 50Hz export doc, same cabinet family as 60Hz 50DJ) (20-25 T T; c.1985-1995) Model prefixes: Carrier: 50DJ (20-25 T), 50DK (20-25 T)	S 37.875 x 31.0 R 49.8125 x 30.5625	✓
OUTSIDE 117-3/16 × 81 2nd outside (on drawing): 116-7/8 × 80-5/8	Trane/American Standard [LEGACY] BAYCURB027B / BAYCURB027* (same footprint: FIACURB404*/804* Precedent 12.5-25 D cabinet)	LEGACY Voyager II T/Y*D180-300F (15-25T, 2000s); Foundation E/GCC180-300, E/GDK180-300; current Precedent 12.5-25 D cabinet (FIACURB404* 14in / FIACURB804* 18in) | ALSO: Voyager R-22 YCD/YCH (and TCD/TCH equivalents) 181C, 211C, 240B, 241C, 300B, 301C (catalog groups: 15-25T high-eff; 20, 25T standard-eff), c.1998-2004; also YC*200B, 250B (1998 IOM YC-IOM-4G p7: "YC*181C, 200B, 211C, 240B, 241C, 250B, 300B, 301C": J=117-3/16, H=81, top 116-13/16 x 80-5/8); also WSD150-240E heat pumps (12.5-20 T) per BAYCURB026B/027B guide p1 | ALSO Voyager R-410A TCD/YCD180/210/240E (2006 catalog p.51) and TCD/YCD180-300F standard, 151-301F high efficiency (RT-PRC028-EN Nov 2011 p.120): same 117-3/16 x 81 curb (15-25 T; c.1996–now) → Trane Precedent 12.5–25T D cabinet (FIACURB404/804, same footprint) Model prefixes: Trane: YCD (15-25 T), YCH (15-25 T), YSD (15-25 T), YSH (15-25 T), YHD (15-25 T), YHH (15-25 T), TCD (15-25 T), TCH (15-25 T), TSD (15-25 T), TSH (15-25 T), THD (15-25 T), THH (15-25 T), WSD (12.5-20 T), WSH (12.5-20 T), YSJ (15-25 T), YHJ (15-25 T), YZJ (12.5-25 T), YSK (15-25 T), YHK (12.5-25 T), YZK (12.5-25 T), TSJ (15-25 T), THJ (15-25 T), TZJ (12.5-25 T), TSK (15-25 T), THK (12.5-25 T), TZK (12.5-25 T), WSJ (12.5-25 T), WHJ (12.5-25 T), DSJ (12.5-25 T), DHJ (12.5-25 T), WSK (12.5-25 T), WHK (12.5-25 T), DSK (12.5-25 T), DHK (12.5-25 T), GCC (15-25 T), GDK (15-25 T), ECC (15-25 T), EDK (15-25 T) · American Standard: YSD (15-25 T), YSH (15-25 T), YHD (15-25 T), YHH (15-25 T)	S 28.5625 x 69.5 R 22.25 x 69.5	✓

OUTSIDE L × W	Brand / curb part	Fit units (tons, years) → new units, no adapter	Openings (inside)	Ver.
OUTSIDE 120 × 80-1/2	Daikin/Goodman/Amana [LEGACY] MPS 015B-025B factory roof curb (P/N not printed) ⚠ twin: Rheem RXKG-CBH14	McQuay/Daikin McQuay Maverick I MPS 015B-025B (15-25 T; c.1998-2010 (B vintage)	S 42 x 23.75 R 22 x 50.75	✓
OUTSIDE 120-3/4 × 77-3/4	Carrier/Bryant/ICP [LEGACY] 48DD900261	Carrier 50EQ 20 T (20 T T;) Model prefixes: Carrier: 50EQ (20 T)	S 59 (along length) x 17 (across) R 59 (along length) x 17 (across)	✗
OUTSIDE 121-1/8 × 63-7/8	Lennox [LEGACY] RMF16-18/24	GCS16-180/240 (also GCS16/CHP16 15-20T) (15-20 T; 1980s–2000s) Model prefixes: Lennox: GCS16 (15-20 T), CHP16 (15-20 T)	S 26 x 45.5 R 26 x 45.5	✓
OUTSIDE 123 × 78	Daikin/Goodman/Amana [LEGACY] 14CURB180300 / 18CURB180300 / 24CURB180300 (Daikin); 14CURB180240 (Goodman CPG/CPC 180-240)	Daikin DCC/DCG 15-25T, DFC/DFG 180-300, R-32 DSC/DSG 180-300; Goodman CPG/CPC 180-240 (15-25 T; c.2010-now) → Daikin DFC/DFG and R-32 DSC/DSG 15-25T (one 15-25T curb family in 2025 catalog Model prefixes: Daikin: DCG (15-25 T), DCC (15-25 T), DFG (15-25 T), DFC (15-25 T), DSG (15-25 T), DSC (15-25 T) · Goodman/Janitrol: CPG (15-20 T), CPC (15-20 T)	S 22 x 61.875 R 23.875 x 61.875	✓
OUTSIDE 126-1/4 × 84	York/JCI [LEGACY] 1RC0437	Sunline 2000 D2CE/D2CG 180 & 240 (1995 TG 530.18-TG3Y; R-22); confirms the 115-1/4 / 126-1/4 x 84 footprint goes back to mid-1990s Sunline 2000 15/20T (20-25 T; c.1993-2003 (Sunline 2000 D2CE/D2CG 15-20T, R-22)) → ZF180/ZF210-300, ZJ/ZR 180-300 (per existing 1RC0436/1RC0437 rows Model prefixes: York: D1CG (20-25 T), D2CG (20-25 T), D3CG (20-25 T), D4CG (20-25 T), D6CG (20-25 T), D7CG (20-25 T), D8CG (20-25 T), D9CG (20-25 T), D1CE (20-25 T), D3CE (20-25 T), D4CE (20-25 T), D5CE (20-25 T), D6CE (20-25 T), DH (17.5-25 T), DJ (15-25 T), DM (17.5-25 T), DR (15-25 T), BP (20 T), BQ (20 T), ZF (17.5-25 T), ZJ (15-25 T), ZR (15-25 T), XP (15-20 T) · York (Coleman/Luxaire): BB (20 T), WK (15-25 T), WW (20-25 T)	S 22.5 x 35.625 R 32.875 x 35.625	✓
OUTSIDE 126-1/2 × 76-3/4	Lennox [LEGACY] RMF3-185/275	Lennox GCS3 15-22.5 T; Lennox CHA8 15-22.5 T (15-22.5 T T;) Model prefixes: Lennox: GCS3 (15-22.5 T), CHA8 (15-22.5 T), CHP8 (15-22.5 T)	S 24 (along length) x 51 (across) R 24 (along length) x 51 (across)	✓
OUTSIDE 133-11/16 × 69-5/8	Lennox [LEGACY] RMF11-275 (RMFH11-275 horizontal)	Lennox GCS11 22.5 T (22.5 T T;) Model prefixes: Lennox: GCS11 (22.5 T), CHA11 (22.5 T), CHP11 (22.5 T)	S 27 5/8 (along length) x 53 5/8 (across) R 23 1/8 (along length) x 64 1/4 (across)	✓
OUTSIDE 140-15/16 × 53-3/8	Rheem/Ruud [LEGACY] RXKG-CAF14	RKKB, RKMB, RKNB 15/20/25T (R-22 Classic commercial, c.2000s) (15-25 T; c.2003-2010 (R-22 RKKB/RKMB/RKNB, form R11-836)) Model prefixes: Rheem/Ruud: RKKB (15-25 T), RKMB (15-25 T), RKNB (15-25 T), RLKB (17.5-25 T), RLMB (15-25 T), RLNB (15-25 T)	S 24 x 42 R 22 x 41	✓
OUTSIDE 146-5/16 × 76	Carrier/Bryant/ICP [LEGACY] 50DW024-028 accessory roof curb (1987 doc; accessory no. not legible) | Carrier no. 50DJ900401 (accessory roof curb for 48DJ/48DK024-030 gas units, Carrier 48DJ,DK024-030 installation instructions Fig. 2 p6: 12'-2 5/16" x 6'-4" x 1'-2")	Carrier 50DW024-028 (1980s electric cooling, DW cabinet; 50Hz export doc) | ALSO Carrier 48DJ/48DK024-030 (gas/electric, 20-25 T) - same curb per Carrier 48DJ_DK-1SI p6 (https://www.shareddocs.com/hvac/docs/1005/Public/0E/48DJ_DK-1SI.pdf) (20-25 T T; c.1985-1995) Model prefixes: Carrier: 48DJ (20-25 T), 48DK (20-25 T), 50DW (20-25 T), 50DY (20-25 T)	S not resolved from the scan (printed plan dims 2'-3 (686), 3'-2 5/8 (981), 4'-0 1/2 (1232), 6'-6 5/8 (1997)) R 30.5625 (across, 2'-6 9/16) x 46.75 (along, 3'-10 3/4) - layout read by analogy with Fig 2A	✓
OUTSIDE 150 × 69-3/8	Carrier/Bryant/ICP [LEGACY] 70849D04	Bryant 579C 20 T; Bryant 559C 20 T; Bryant 599C 20 T (20 T T;) Model prefixes: Bryant: 579C (20 T), 559C (20 T), 599C (20 T)	S not on file R not on file	✗
OUTSIDE 158-5/8 × 72-7/8	Daikin/Goodman/Amana [LEGACY] Rebel standard roof curb – large cabinet (P/N not printed)	Daikin Applied Rebel DPS016-028 (16-28T) (16-28 T; c.2009-now (span not stated in doc))	S 45.0 x 45.0 R 56.8 x 26.0	≈
OUTSIDE 164-3/4 × 69-3/8	Carrier/Bryant/ICP [LEGACY] 70849D05	Bryant 579C 25 T; Bryant 559C 25 T; Bryant 599C 25 T (25 T T;) Model prefixes: Bryant: 579C (25 T), 559C (25 T), 599C (25 T)	S not on file R not on file	✗

OUTSIDE L × W	Brand / curb part	Fit units (tons, years) → new units, no adapter	Openings (inside)	Ver.
OUTSIDE 175-3/16 × 67-3/4	Daikin/Goodman/Amana [LEGACY] MPS 015F-020G factory roof curb (P/N not printed)	Daikin McQuay Maverick II MPS 015F-020G (15-20 T; c.2008-now (F/G vintage)	S 21.25 x 47.88 R 23.5 x 63.75 (full inside width)	≈
OUTSIDE 175-3/16 × 91-1/4	Daikin/Goodman/Amana [LEGACY] MPS 026G-035F factory roof curb (P/N not printed)	Daikin McQuay Maverick II MPS 026G-035F (26-35 T; c.2008-now (span unverified))	S 21.25 x 71.38 R 23.5 x 87.25 (full inside width)	≈
12.5–30 TON — CURRENT / RECENT				
OUTSIDE 102 × 86-1/8	Lennox C1CURB70C-1 (8) 11F58 / C1CURB71C-1 (14) 11F59 / C1CURB72C-1 (18) 11F60 / C1CURB73C-1 (24) 11F61 ⚠ twin: Lennox LARMF18/36-14, Lennox Roof mounting frame with double duct opening, LGB/LGE240H, Lennox 11T90	K-Series KGA/KGB/KCA 156-300 (2014-2023); SAME curbs (11F58-61) listed for Xion LGX/LCX, Enlight LDT/LGT, Model L LGM 13-25T (2023-2024) (13-25 T; 2014–now) → Lennox Xion, Enlight, Model L 13–25T (current curb) Model prefixes: Lennox: LGH (13-25 T), LCH (13-25 T), KGA (13-25 T), KGB (13-25 T), KGC (15-25 T), KCA (13-25 T), KCC (15-25 T), KHC (15-20 T), LGM (13-25 T), LCM (13-25 T), LGT (13-25 T), LDT (13-25 T), LGX (13-25 T), LCX (13-25 T), LHX (13-25 T) · Allied Commercial: KGA (13-25 T), KCA (13-25 T), LGX (13-25 T), LCX (13-25 T), LHX (13-25 T)	S 61.5 x 21 R 61.5 x 16	✓
OUTSIDE 102-1/8 × 86-1/4 2nd outside (bottom): 102-1/2 × 86-5/8	Lennox 11T90 (30 in, slab) / 11T97 (41 in, rooftop) horizontal roof curb ⚠ twin: Lennox C1CURB70C-1 11F58, Lennox LARMF18/36-14, Lennox Roof mounting frame with double duct opening, LGB/LGE240H	Lennox Enlight LHT302 (25 T heat pump, R-454B) HORIZONTAL discharge; needs the horizontal return air panel kit 38K48. Downflow LHT302 uses the 11F62/63/64 curb (115-1/8 x 86-1/8) (25 T; 2025-now) Model prefixes: Lennox: LHT (25 (horizontal curb) T)	S horizontal: 75 x 18 side opening in the curb wall (1-1/2 in flange) R horizontal return on the unit (78-1/2 x 15), not through the curb	✓
OUTSIDE 109-1/4 × 57-9/16	Carrier/Bryant/ICP CRRFCURB074A00 (14 in) / CRRFCURB075A00 (24 in) ⚠ twin: Carrier CRRFCURB072A00	Carrier 48TC 16; Bryant 580J 16 (15 T T; current) → Carrier 48TC 16 (this is the current curb) Model prefixes: Carrier: 48TC (15 T), 48HC (12.5 T), 48LC (7.5-10 T), 48FC (15 T), 50TC (15 T), 50HC (12.5 T), 50LC (7.5-10 T), 50FC (15 T), 50HCQ (10 T), 50FCQ (12.5 T), 50GCQ (10 T), 48FE (15 T), 50FE (15 T), 50FEQ (12.5 T), 48GE (12.5 T), 50GE (12.5 T), 50GEQ (10 T), 48WE (7.5-10 T), 50WE (7.5-10 T), 48QE (10 T) · Bryant: 580J (15 T) · ICP: RGS (15 T), RAS (15 T), RGH (12.5 T), RAH (12.5 T), RHH (12.5 T), RAG (12.5 T)	S 29.44 (along length) x 35.44 (across) R 15.31 (across) x ~47 (along length, derived)	✓
OUTSIDE 109-1/4 × 57-9/16	Carrier/Bryant/ICP CRRFCURB072A00 (14 in) / CRRFCURB073A00 (24 in) ⚠ twin: Carrier CRRFCURB074A00	Carrier 50TCQ D14 (12.5 T heat pump, R-410A, 2012) | ALSO ICP RHS150 heat pump (12.5 T; ICP RHS product data p.6 lists CRRFCURB072A00/073A00 for size 150, drawing p.36) (12.5 T; 2012-) → Carrier 50TCQ14 / ICP RHS150 Model prefixes: Carrier: 50TCQ (12.5 T) · ICP: RHS (12.5 T)	S 31.38 (across, 31-3/8) x 15.69 (along length, 15-11/16) R 15.31 (across, 15-5/16) x 40.13 (along length, 40-1/8)	✓
OUTSIDE 115-1/8 × 86-1/8	Lennox 11F74 (14 in) / 11F75 (24 in) hybrid full perimeter ⚠ twin: Lennox LARMF30/36S-14, Lennox 11F62	Strategos SGH/SCH/SHH/SDH 240 (20 T; c.2019-now) Model prefixes: Lennox: SGC (20 T), SCC (20 T), SGH (20 T), SCH (20 T)	S 21 x 61.5 R 16 x 61.5	✓
OUTSIDE 115-1/8 × 86-1/8	Lennox 11F62 (14 in) / 11F63 (18 in) / 11F64 (24 in) hybrid downflow ⚠ twin: Lennox 11F74, Lennox LARMF30/36S-14	Enlight LHT 302 (25 ton heat pump) and LGT/LCT 302/360 (25-30 ton gas/electric & cooling), D-box, R-454B, 2025+ (25-30 T; 2025-now) Model prefixes: Lennox: SGC (24 T), SCC (24 T), LGT (25-27 T), LCT (25-27 T), LHT (25 T)	S 21 x 61.5 R 16 x 79.5	✓
OUTSIDE 120 × 80-1/2	Rheem/Ruud RXKG-CBH14 ⚠ twin: Daikin MPS 015B-025B factory roof curb	RKNL-B 15-20T; RKNL-C/H 15-25T (Classic/Achiever) | ALSO Ruud RHPH2T heat pump 15-20 T (RHPH product data p.44) (15-25 T; years n/a) Model prefixes: Rheem/Ruud: RKNL (15-25 T), RKRL (15-20 T), RLKL (15-20 T), RLNL (15-25 T), RLRL (15-20 T)	S 42 x 23.75 R 22 x 50.75	✓

OUTSIDE L × W	Brand / curb part	Fit units (tons, years) → new units, no adapter	Openings (inside)	Ver.
OUTSIDE 121-5/8 × 80-5/8	Carrier/Bryant/ICP CRRFCURB045A00 (14 in) / CRRFCURB046A00 (24 in) ⚠ twin: York 1RC0443	Carrier 48LC 14 (WeatherExpert); Carrier 48TC 17/20 vertical (same outside dims, part no. not printed on that page) (12.5 T (48LC14); 15-17.5 T (48TC 17/20) T; current) → Carrier 48TC 17–20 / 48LC 14 (current curb) Model prefixes: Carrier: 48TC (15-17.5 T), 48HC (15 T), 48LC (12.5 T), 48GC (15 T), 50TC (15-17.5 T), 50HC (15 T), 50LC (12.5 T), 50GC (15 T), 50FCQ (15 T), 48FE (17.5 T), 50FE (17.5 T), 50GEQ (15 T) · Bryant: 580J (15-17.5 T), 581J (15 T), 551J (15 T), 548J (15 T), 549L (15 T) · ICP: RHS (15 T), RGH (15 T), RGV (17.5 T), RAV (17.5 T), RGF (17.5 T), RAF (17.5 T)	S 27.875 (along length, inside, 2'-3 7/8) x 63.875 (across, derived; isometric duct box 5'-3 1/4) R 22.25 (along length, inside, 1'-10 1/4) x 69.5625 (across, derived; isometric duct box 5'-8 3/4)	✓
OUTSIDE 123-9/16 × 81-3/4	Rheem/Ruud RXRX-DGC14 / RXRX-DGC18 / RXRX-DGC24	RACG (A/C) and RGEG (gas/electric) Renaissance 15-25T; Ruud equivalents UACG/UGEG (15-25 T; c.2018-now (Renaissance 15-25T, R-410A) → RACG, RGEG (and current R-454B Renaissance 15-25T if same cabinet, unverified Model prefixes: Rheem/Ruud: RGEG (15-25 T), RACG (15-25 T)	S 20.84 x 78.19 (S/A I.D.; supply duct 19-3/4 x 77-1/8) R 17.875 x 78.19 R/A I.D. (return duct 16-3/4 x 77-1/8); a second 13-15/16 in R/A I.D. bay also shown	✓
OUTSIDE 135-5/8 × 80-5/8 2nd outside (ProVent CBKDSAV2025 replacement curb O.D. (unverified)): 135-1/8 × 80-1/8	York/JCI 1RC0444 (14 in) / 1RC0447 (24 in) ⚠ twin: Carrier CRRFCURB047A00	Sun Choice AV20, AV25 (R-410A, 2019-2024); HV15, HV20 (2022-); WV15, WV20 (R-454B, 2024-); KV20/KV25 (per existing row) (15-25 T; 2019-now (Sun Choice AV/HV/WV/KV)) → all current Sun Choice WV/KV of this size Model prefixes: York: AV (20-25 T), AW (sizes 13-15 T), AD (20-25 T), AE (sizes 13-15 T), AH (17.5-20 (sizes 18-20) T), AL (17.5-20 (sizes 18-20) T), HV (15-20 T)	S 27.88 x 63.88 R about 44 x 69.44 (whole return section, split by one center duct support rail; 22.19 is the printed bay to that rail)	✓
OUTSIDE 135-11/16 × 80-5/8	Carrier/Bryant/ICP CRRFCURB047A00 (14 in) / CRRFCURB048A00 (24 in) ⚠ twin: York 1RC0444	Carrier 48LC 17, 20; Carrier 48TC 24/28 vertical (same outside dims) (15-17.5 T (48LC); 20-25 T (48TC 24/28) T; current) → Carrier 48TC 24–28 / 48LC 17–20 (current curb) Model prefixes: Carrier: 48TC (20-25 T), 48HC (17.5-20 T), 48LC (15-17.5 T), 48GC (17.5-20 T), 50TC (20-25 T), 50HC (17.5-20 T), 50LC (15-17.5 T), 50GC (17.5-20 T), 50FCQ (20-25 T), 48FE (20-25 T), 50FE (20-25 T), 50GEQ (20-25 T), 48WE (15 T), 50WE (15 T) · Bryant: 580J (20-25 T), 581J (17.5-20 T), 551J (17.5-20 T), 548J (20 T), 549L (17.5-20 T) · ICP: RHS (20 T), RGH (17.5-20 T), RGV (20-25 T), RAV (20-25 T), RGF (20-25 T), RAF (20-25 T)	S 27.875 (along length, inside, 2'-3 7/8) x 63.875 (across, derived; isometric duct box 5'-3 1/4) R 22.25 (along length, inside, 1'-10 1/4) x 69.5625 (across, derived; isometric duct box 5'-8 3/4)	✓
OUTSIDE 151-15/16 × 80-5/8	Carrier/Bryant/ICP CRRFCURB049A00 (14 in) / CRRFCURB050A00 (24 in) ⚠ twin: York 1RC0445	Carrier 48LC 24, 26; Carrier 48TC 30 vertical (same outside dims) (20-25 T (48LC); 25-27.5 T (48TC 30) T; current) → Carrier 48TC 30 / 48LC 24–26 (current curb) Model prefixes: Carrier: 48TC (25-27.5 T), 48HC (25 T), 48LC (20-25 T), 48GC (25 T), 50TC (25-27.5 T), 50HC (25 T), 50LC (20-25 T), 50GC (25 T), 48FE (27.5 T), 50FE (27.5 T) · Bryant: 580J (25-27.5 T), 581J (25 T), 551J (25 T), 549L (25 T) · ICP: RGH (25 T), RGV (27.5 T), RAV (27.5 T), RGF (27.5 T), RAF (27.5 T)	S 27.875 (along length, inside, 2'-3 7/8) x 63.875 (across, derived; isometric duct box 5'-3 1/4) R 22.25 (along length, inside, 1'-10 1/4) x 69.5625 (across, derived; isometric duct box 5'-8 3/4)	✓
OUTSIDE 152 × 80-5/8 2nd outside (ProVent CBKDSAV28 replacement curb O.D. (unverified)): 151-1/2 × 80-1/8	York/JCI 1RC0445 (14 in) / 1RC0448 (24 in) ⚠ twin: Carrier CRRFCURB049A00	Sun Choice AV28 (R-410A 27.5T, 2019-2024); HV25 (25T, 2022-); WV25 (R-454B 25T, 2024-); KV28 (per existing row) (25-27.5 T; 2019-now (Sun Choice AV/HV/WV/KV)) → all current Sun Choice WV/KV of this size Model prefixes: York: AV (27.5 T), AW (sizes 18-23 T), AD (27.5 T), AE (sizes 18-23 T), AH (25 (size 25) T), AL (25 (size 25) T), HV (25 T)	S 27.88 x 63.88 R about 44 x 69.44 (whole return section, split by one center duct support rail; 22.19 is the printed bay to that rail)	✓
OUTSIDE 162-7/16 × 81-1/4	Carrier/Bryant/ICP CRRFCURB005A00	Carrier 48/50A 020-035 (WeatherMaker/48A2,A3 etc.) (20-30 T T; 2000s–now)	S 60 (along length) x 24 (across) R 114.625 (along length, from end rail to the cross member at the condenser section) x 24 (across)	✓

Model prefix index

Nameplate model-family prefixes (3–27 nominal tons) and the curb on file for each, by tonnage. Match the longest prefix of the nameplate model; the size code (036/060/120, or Carrier 04–28) picks the cabinet. “Not on file yet” = no factory curb document found yet: measure the curb and use the size table.

Prefix	Brand	Generation	Curb on file (tons → OUTSIDE L × W, part)
48DD	Carrier	Legacy gas/electric	15 T → OUTSIDE 87-1/8 × 68-5/8 48DD016 curb 7.5 T → OUTSIDE 60-3/8 × 55-7/8 factory curb no. not found
48DH	Carrier	Legacy gas/electric	3-4 T → OUTSIDE 68-1/2 × 66 factory curb no. not found 5 T → OUTSIDE 83-3/4 × 45-5/8 factory curb no. not found 7.5-8.5 T → OUTSIDE 60-3/8 × 55-7/8 factory curb no. not found
48DL	Carrier	Legacy gas/electric	4 T → OUTSIDE 68-1/2 × 66 factory curb no. not found
48DM	Carrier	Legacy gas/electric	3 T → OUTSIDE 68-1/2 × 66 factory curb no. not found
48HD	Carrier	Legacy gas/electric	3-6 T → OUTSIDE 69-1/2 × 37 48HD/48LD 004-007 accessory curb 6 T → OUTSIDE 69-1/8 × 36-1/2 309427-101
48HDT	Carrier	Legacy gas/electric	4-5 T → OUTSIDE 69-1/8 × 36-1/2 309427-101
48LD	Carrier	Legacy gas/electric	3-5 T → OUTSIDE 69-1/2 × 37 48HD/48LD 004-007 accessory curb 6 T → OUTSIDE 69-1/8 × 36-1/2 309427-101
48LDT	Carrier	Legacy gas/electric	3-5 T → OUTSIDE 69-1/8 × 36-1/2 309427-101
48DJ	Carrier	Legacy commercial G/E	3-6 T → OUTSIDE 67-1/8 × 36-15/16 CRRFCURB001A00 7.5-12.5 T → OUTSIDE 78 × 49-3/4 CRRFCURB003A00 20-25 T → OUTSIDE 146-5/16 × 76 50DW024-028 accessory roof curb | Carrier no. 50DJ900401
48DK	Carrier	Legacy commercial G/E	20-25 T → OUTSIDE 146-5/16 × 76 50DW024-028 accessory roof curb | Carrier no. 50DJ900401
48DP	Carrier	Legacy commercial G/E	10-20 T → OUTSIDE 74-1/4 × 67-1/16 50PQ900221 20-25 T → OUTSIDE 86-13/16 × 74-1/4 48DP900041 5 T → OUTSIDE 68-1/8 × 39-3/8 5 T T curb
48DR	Carrier	Legacy commercial G/E	10-20 T → OUTSIDE 74-1/4 × 67-1/16 50PQ900221
48GJ	Carrier	Legacy commercial G/E	5 T → OUTSIDE 67-1/8 × 36-15/16 CRRFCURB001A00 7.5-10 T → OUTSIDE 78 × 49-3/4 CRRFCURB003A00
48LJ	Carrier	Legacy commercial G/E	3-6 T → OUTSIDE 67-1/8 × 36-15/16 CRRFCURB001A00 7.5-12.5 T → OUTSIDE 78 × 49-3/4 CRRFCURB003A00
48HM	Carrier	Legacy commercial G/E	6 T → OUTSIDE 67-1/8 × 36-15/16 CRRFCURB001A00
48HJ	Carrier	Legacy commercial G/E	3-6 T → OUTSIDE 67-1/8 × 36-15/16 CRRFCURB001A00 7.5-12.5 T → OUTSIDE 78 × 49-3/4 CRRFCURB003A00
48TJ	Carrier	Legacy commercial G/E	3-6 T → OUTSIDE 67-1/8 × 36-15/16 CRRFCURB001A00 7.5-12.5 T → OUTSIDE 78 × 49-3/4 CRRFCURB003A00 15-25 T → OUTSIDE 74-1/4 × 67-1/16 50PQ900221 20-25 T → OUTSIDE 86-13/16 × 74-1/4 48DP900041
48TF	Carrier	Legacy commercial G/E	3-6 T → OUTSIDE 67-1/8 × 36-15/16 CRRFCURB001A00 7.5-12.5 T → OUTSIDE 78 × 49-3/4 CRRFCURB003A00
48TM	Carrier	Legacy commercial G/E	3-6 T → OUTSIDE 67-1/8 × 36-15/16 CRRFCURB001A00 7.5-12.5 T → OUTSIDE 78 × 49-3/4 CRRFCURB003A00 15-20 T → OUTSIDE 74-1/4 × 67-1/16 50PQ900221 25 T → OUTSIDE 89-1/16 × 74-1/4 CRRFCURB025A00
50CD	Carrier	Legacy cooling/electric	3-6 T → OUTSIDE 61-5/16 × 36-1/2 factory curb no. not found 7.5-8.5 T → OUTSIDE 64-11/16 × 60-3/4 307175-103
50CV	Carrier	Legacy cooling/electric	5-8.5 T → OUTSIDE 64-11/16 × 60-3/4 307175-103
50DD	Carrier	Legacy cooling/electric	5 T → OUTSIDE 83-3/4 × 45-5/8 factory curb no. not found 10 T → OUTSIDE 76-1/8 × 56-1/8 factory curb no. not found
50DH	Carrier	Legacy cooling/electric	5 T → OUTSIDE 83-3/4 × 45-5/8 factory curb no. not found

Prefix	Brand	Generation	Curb on file (tons → OUTSIDE L × W, part)
50DJ	Carrier	Legacy cooling/electric	3-6 T → OUTSIDE 67-1/8 × 36-15/16 CRRFCURB001A00 7.5-12.5 T → OUTSIDE 78 × 49-3/4 CRRFCURB003A00 20-25 T → OUTSIDE 116-3/16 × 84 50DJ/DW024-028 accessory roof curb
50DK	Carrier	Legacy cooling/electric	20-25 T → OUTSIDE 116-3/16 × 84 50DJ/DW024-028 accessory roof curb
50DP	Carrier	Legacy cooling/electric	10-20 T → OUTSIDE 74-1/4 × 67-1/16 50PQ900221 5 T → OUTSIDE 68-1/8 × 39-3/8 5 T T curb
50DW	Carrier	Legacy cooling/electric	20-25 T → OUTSIDE 146-5/16 × 76 50DW024-028 accessory roof curb | Carrier no. 50DJ900401
50DY	Carrier	Legacy cooling/electric	20-25 T → OUTSIDE 146-5/16 × 76 50DW024-028 accessory roof curb | Carrier no. 50DJ900401
50GJ	Carrier	Legacy cooling/electric	5 T → OUTSIDE 67-1/8 × 36-15/16 CRRFCURB001A00 7.5-10 T → OUTSIDE 78 × 49-3/4 CRRFCURB003A00
50LJ	Carrier	Legacy cooling/electric	3-6 T → OUTSIDE 67-1/8 × 36-15/16 CRRFCURB001A00 7.5-12.5 T → OUTSIDE 78 × 49-3/4 CRRFCURB003A00
50HM	Carrier	Legacy cooling/electric	6 T → OUTSIDE 67-1/8 × 36-15/16 CRRFCURB001A00
50HJ	Carrier	Legacy cooling/electric	3-6 T → OUTSIDE 67-1/8 × 36-15/16 CRRFCURB001A00 7.5-12.5 T → OUTSIDE 78 × 49-3/4 CRRFCURB003A00
50TJ	Carrier	Legacy cooling/electric	3-6 T → OUTSIDE 67-1/8 × 36-15/16 CRRFCURB001A00 7.5-12.5 T → OUTSIDE 78 × 49-3/4 CRRFCURB003A00 15-25 T → OUTSIDE 74-1/4 × 67-1/16 50PQ900221
50TF	Carrier	Legacy cooling/electric	3-6 T → OUTSIDE 67-1/8 × 36-15/16 CRRFCURB001A00 7.5-12.5 T → OUTSIDE 78 × 49-3/4 CRRFCURB003A00
50TFF	Carrier	Legacy cooling/electric	3-6 T → OUTSIDE 67-1/8 × 36-15/16 CRRFCURB001A00 6-12.5 T → OUTSIDE 78 × 49-3/4 CRRFCURB003A00
50TM	Carrier	Legacy cooling/electric	3-6 T → OUTSIDE 67-1/8 × 36-15/16 CRRFCURB001A00 7.5-12.5 T → OUTSIDE 78 × 49-3/4 CRRFCURB003A00 15-25 T → OUTSIDE 74-1/4 × 67-1/16 50PQ900221
50QD	Carrier	Legacy heat pumps	5 T → OUTSIDE 61-5/16 × 36-1/2 factory curb no. not found 7.5-8.5 T → OUTSIDE 64-11/16 × 60-3/4 307175-103
50QV	Carrier	Legacy heat pumps	5 T → OUTSIDE 64-11/16 × 60-3/4 307175-103
50QJ	Carrier	Legacy heat pumps	3-5 T → OUTSIDE 67-1/8 × 36-15/16 CRRFCURB001A00 7.5-10 T → OUTSIDE 78 × 49-3/4 CRRFCURB003A00
50PQ	Carrier	Legacy heat pumps	10-20 T → OUTSIDE 74-1/4 × 67-1/16 50PQ900221 5 T → OUTSIDE 68-1/8 × 39-3/8 5 T T curb
50EQ	Carrier	Legacy heat pumps	20 T → OUTSIDE 120-3/4 × 77-3/4 48DD900261 5 T → OUTSIDE 68-1/8 × 39-3/8 5 T T curb
50LJQ	Carrier	Legacy heat pumps	3-6 T → OUTSIDE 67-1/8 × 36-15/16 CRRFCURB001A00 7.5-12.5 T → OUTSIDE 78 × 49-3/4 CRRFCURB003A00
50HJQ	Carrier	Legacy heat pumps	3-6 T → OUTSIDE 67-1/8 × 36-15/16 CRRFCURB001A00 6-10 T → OUTSIDE 81-3/4 × 53-1/2 CRRFCURB003A01 12.5-15 T → OUTSIDE 74-1/4 × 67-1/16 50PQ900221
50TJQ	Carrier	Legacy heat pumps	3-6 T → OUTSIDE 67-1/8 × 36-15/16 CRRFCURB001A00 7.5-10 T → OUTSIDE 78 × 49-3/4 CRRFCURB003A00
50TFQ	Carrier	Legacy heat pumps	3-6 T → OUTSIDE 67-1/8 × 36-15/16 CRRFCURB001A00 7.5-10 T → OUTSIDE 78 × 49-3/4 CRRFCURB003A00
48TC	Carrier	Later gas/electric	3-6 T → OUTSIDE 70-7/8 × 40-11/16 CRRFCURB001A01 7.5-12.5 T → OUTSIDE 81-3/4 × 53-1/2 CRRFCURB003A01 15 T → OUTSIDE 109-1/4 × 57-9/16 CRRFCURB074A00 15-17.5 T → OUTSIDE 121-5/8 × 80-5/8 CRRFCURB045A00 20-25 T → OUTSIDE 135-11/16 × 80-5/8 CRRFCURB047A00 25-27.5 T → OUTSIDE 151-15/16 × 80-5/8 CRRFCURB049A00

Prefix	Brand	Generation	Curb on file (tons → OUTSIDE L × W, part)
48HC	Carrier	Later gas/electric	3-6 T → OUTSIDE 70-7/8 × 40-11/16 CRRFCURB001A01 6-10 T → OUTSIDE 81-3/4 × 53-1/2 CRRFCURB003A01 12.5 T → OUTSIDE 109-1/4 × 57-9/16 CRRFCURB074A00 15 T → OUTSIDE 121-5/8 × 80-5/8 CRRFCURB045A00 17.5-20 T → OUTSIDE 135-11/16 × 80-5/8 CRRFCURB047A00 25 T → OUTSIDE 151-15/16 × 80-5/8 CRRFCURB049A00
48KC	Carrier	Later gas/electric	3-6 T → OUTSIDE 70-7/8 × 40-11/16 CRRFCURB001A01
48LC	Carrier	Later gas/electric	3-6 T → OUTSIDE 70-7/8 × 40-11/16 CRRFCURB001A01 6 T → OUTSIDE 81-3/4 × 53-1/2 CRRFCURB003A01 7.5-10 T → OUTSIDE 109-1/4 × 57-9/16 CRRFCURB074A00 12.5 T → OUTSIDE 121-5/8 × 80-5/8 CRRFCURB045A00 15-17.5 T → OUTSIDE 135-11/16 × 80-5/8 CRRFCURB047A00 20-25 T → OUTSIDE 151-15/16 × 80-5/8 CRRFCURB049A00
48JC	Carrier	Later gas/electric	3-6 T → OUTSIDE 70-7/8 × 40-11/16 CRRFCURB001A01
48FC	Carrier	Later gas/electric	3-6 T → OUTSIDE 70-7/8 × 40-11/16 CRRFCURB001A01 7.5-12.5 T → OUTSIDE 81-3/4 × 53-1/2 CRRFCURB003A01 15 T → OUTSIDE 109-1/4 × 57-9/16 CRRFCURB074A00
48GC	Carrier	Later gas/electric	3-6 T → OUTSIDE 70-7/8 × 40-11/16 CRRFCURB001A01 15 T → OUTSIDE 121-5/8 × 80-5/8 CRRFCURB045A00 17.5-20 T → OUTSIDE 135-11/16 × 80-5/8 CRRFCURB047A00 25 T → OUTSIDE 151-15/16 × 80-5/8 CRRFCURB049A00
50TC	Carrier	Later cooling/electric	3-6 T → OUTSIDE 70-7/8 × 40-11/16 CRRFCURB001A01 7.5-12.5 T → OUTSIDE 81-3/4 × 53-1/2 CRRFCURB003A01 15 T → OUTSIDE 109-1/4 × 57-9/16 CRRFCURB074A00 15-17.5 T → OUTSIDE 121-5/8 × 80-5/8 CRRFCURB045A00 20-25 T → OUTSIDE 135-11/16 × 80-5/8 CRRFCURB047A00 25-27.5 T → OUTSIDE 151-15/16 × 80-5/8 CRRFCURB049A00
50HC	Carrier	Later cooling/electric	3-6 T → OUTSIDE 70-7/8 × 40-11/16 CRRFCURB001A01 6-10 T → OUTSIDE 81-3/4 × 53-1/2 CRRFCURB003A01 12.5 T → OUTSIDE 109-1/4 × 57-9/16 CRRFCURB074A00 15 T → OUTSIDE 121-5/8 × 80-5/8 CRRFCURB045A00 17.5-20 T → OUTSIDE 135-11/16 × 80-5/8 CRRFCURB047A00 25 T → OUTSIDE 151-15/16 × 80-5/8 CRRFCURB049A00
50KC	Carrier	Later cooling/electric	3-6 T → OUTSIDE 70-7/8 × 40-11/16 CRRFCURB001A01
50LC	Carrier	Later cooling/electric	3-6 T → OUTSIDE 70-7/8 × 40-11/16 CRRFCURB001A01 6 T → OUTSIDE 81-3/4 × 53-1/2 CRRFCURB003A01 7.5-10 T → OUTSIDE 109-1/4 × 57-9/16 CRRFCURB074A00 12.5 T → OUTSIDE 121-5/8 × 80-5/8 CRRFCURB045A00 15-17.5 T → OUTSIDE 135-11/16 × 80-5/8 CRRFCURB047A00 20-25 T → OUTSIDE 151-15/16 × 80-5/8 CRRFCURB049A00
50JC	Carrier	Later cooling/electric	3-6 T → OUTSIDE 70-7/8 × 40-11/16 CRRFCURB001A01
50FC	Carrier	Later cooling/electric	3-6 T → OUTSIDE 70-7/8 × 40-11/16 CRRFCURB001A01 7.5-12.5 T → OUTSIDE 81-3/4 × 53-1/2 CRRFCURB003A01 15 T → OUTSIDE 109-1/4 × 57-9/16 CRRFCURB074A00
50GC	Carrier	Later cooling/electric	3-6 T → OUTSIDE 70-7/8 × 40-11/16 CRRFCURB001A01 15 T → OUTSIDE 121-5/8 × 80-5/8 CRRFCURB045A00 17.5-20 T → OUTSIDE 135-11/16 × 80-5/8 CRRFCURB047A00 25 T → OUTSIDE 151-15/16 × 80-5/8 CRRFCURB049A00
50TCQ	Carrier	Later heat pumps	3-6 T → OUTSIDE 70-7/8 × 40-11/16 CRRFCURB001A01 7.5-10 T → OUTSIDE 81-3/4 × 53-1/2 CRRFCURB003A01 12.5 T → OUTSIDE 109-1/4 × 57-9/16 CRRFCURB072A00
50HCQ	Carrier	Later heat pumps	3-6 T → OUTSIDE 70-7/8 × 40-11/16 CRRFCURB001A01 6-7.5 T → OUTSIDE 81-3/4 × 53-1/2 CRRFCURB003A01 10 T → OUTSIDE 109-1/4 × 57-9/16 CRRFCURB074A00

Prefix	Brand	Generation	Curb on file (tons → OUTSIDE L × W, part)
50KCQ	Carrier	Later heat pumps	3-6 T → OUTSIDE 70-7/8 × 40-11/16 CRRFCURB001A01
50FCQ	Carrier	Later heat pumps	3-6 T → OUTSIDE 70-7/8 × 40-11/16 CRRFCURB001A01 7.5-10 T → OUTSIDE 81-3/4 × 53-1/2 CRRFCURB003A01 12.5 T → OUTSIDE 109-1/4 × 57-9/16 CRRFCURB074A00 15 T → OUTSIDE 121-5/8 × 80-5/8 CRRFCURB045A00 20-25 T → OUTSIDE 135-11/16 × 80-5/8 CRRFCURB047A00
50GCQ	Carrier	Later heat pumps	3-6 T → OUTSIDE 70-7/8 × 40-11/16 CRRFCURB001A01 6-7.5 T → OUTSIDE 81-3/4 × 53-1/2 CRRFCURB003A01 10 T → OUTSIDE 109-1/4 × 57-9/16 CRRFCURB074A00
48FE	Carrier	Newer R-454B families	3-6 T → OUTSIDE 70-7/8 × 40-11/16 CRRFCURB001A01 7.5-12.5 T → OUTSIDE 81-3/4 × 53-1/2 CRRFCURB003A01 15 T → OUTSIDE 109-1/4 × 57-9/16 CRRFCURB074A00 17.5 T → OUTSIDE 121-5/8 × 80-5/8 CRRFCURB045A00 20-25 T → OUTSIDE 135-11/16 × 80-5/8 CRRFCURB047A00 27.5 T → OUTSIDE 151-15/16 × 80-5/8 CRRFCURB049A00
50FE	Carrier	Newer R-454B families	3-6 T → OUTSIDE 70-7/8 × 40-11/16 CRRFCURB001A01 7.5-12.5 T → OUTSIDE 81-3/4 × 53-1/2 CRRFCURB003A01 15 T → OUTSIDE 109-1/4 × 57-9/16 CRRFCURB074A00 17.5 T → OUTSIDE 121-5/8 × 80-5/8 CRRFCURB045A00 20-25 T → OUTSIDE 135-11/16 × 80-5/8 CRRFCURB047A00 27.5 T → OUTSIDE 151-15/16 × 80-5/8 CRRFCURB049A00
50FEQ	Carrier	Newer R-454B families	3-6 T → OUTSIDE 70-7/8 × 40-11/16 CRRFCURB001A01 7.5-10 T → OUTSIDE 81-3/4 × 53-1/2 CRRFCURB003A01 12.5 T → OUTSIDE 109-1/4 × 57-9/16 CRRFCURB074A00
48GE	Carrier	Newer R-454B families	3-6 T → OUTSIDE 70-7/8 × 40-11/16 CRRFCURB001A01 6-10 T → OUTSIDE 81-3/4 × 53-1/2 CRRFCURB003A01 12.5 T → OUTSIDE 109-1/4 × 57-9/16 CRRFCURB074A00
50GE	Carrier	Newer R-454B families	3-6 T → OUTSIDE 70-7/8 × 40-11/16 CRRFCURB001A01 6-10 T → OUTSIDE 81-3/4 × 53-1/2 CRRFCURB003A01 12.5 T → OUTSIDE 109-1/4 × 57-9/16 CRRFCURB074A00
50GEQ	Carrier	Newer R-454B families	3-6 T → OUTSIDE 70-7/8 × 40-11/16 CRRFCURB001A01 6-7.5 T → OUTSIDE 81-3/4 × 53-1/2 CRRFCURB003A01 10 T → OUTSIDE 109-1/4 × 57-9/16 CRRFCURB074A00 15 T → OUTSIDE 121-5/8 × 80-5/8 CRRFCURB045A00 20-25 T → OUTSIDE 135-11/16 × 80-5/8 CRRFCURB047A00
48JE	Carrier	Newer R-454B families	Not on file yet — 48JE/50JE = Carrier WeatherExpert R-454B successors of 48JC/50JC (Carrier Puron Advance roadmap 01-811-20608-01, 06/2024, light commercial page). As of Nov 2026 no 48JE/50JE product data or install doc is on Carrier's doc server (probed the 48JC naming pattern 48JE-4-6-01SI / 48-50JE-4-6-01PD and variants in all 16 folders of /docs/1005 and /1009) and carrier.com has no 48je/50je page. 48JC 04-06 uses CRRFCURB001A01 (row 1) - likely, unconfirmed.
50JE	Carrier	Newer R-454B families	Not on file yet — 50JE/48JE = Carrier WeatherExpert R-454B successors of 48JC/50JC (Carrier Puron Advance roadmap 01-811-20608-01, 06/2024, light commercial page). As of Nov 2026 no 48JE/50JE product data or install doc is on Carrier's doc server (probed the 48JC naming pattern 48JE-4-6-01SI / 48-50JE-4-6-01PD and variants in all 16 folders of /docs/1005 and /1009) and carrier.com has no 48je/50je page. 48JC 04-06 uses CRRFCURB001A01 (row 1) - likely, unconfirmed.
48WE	Carrier	Newer R-454B families	6 T → OUTSIDE 81-3/4 × 53-1/2 CRRFCURB003A01 7.5-10 T → OUTSIDE 109-1/4 × 57-9/16 CRRFCURB074A00 15 T → OUTSIDE 135-11/16 × 80-5/8 CRRFCURB047A00
50WE	Carrier	Newer R-454B families	6 T → OUTSIDE 81-3/4 × 53-1/2 CRRFCURB003A01 7.5-10 T → OUTSIDE 109-1/4 × 57-9/16 CRRFCURB074A00 15 T → OUTSIDE 135-11/16 × 80-5/8 CRRFCURB047A00
48QE	Carrier	Newer R-454B families	6-7.5 T → OUTSIDE 81-3/4 × 53-1/2 CRRFCURB003A01 10 T → OUTSIDE 109-1/4 × 57-9/16 CRRFCURB074A00

Prefix	Brand	Generation	Curb on file (tons → OUTSIDE L × W, part)
579C	Bryant	Legacy gas/electric	4-5 T → OUTSIDE 81-1/8 × 45-9/16 70849D01 7.5-12.5 T → OUTSIDE 84-7/16 × 60-5/8 70849DA2 15 T → OUTSIDE 102-3/8 × 69-5/8 70849DA3 20 T → OUTSIDE 150 × 69-3/8 70849D04 25 T → OUTSIDE 164-3/4 × 69-3/8 70849D05
579D	Bryant	Legacy gas/electric	3-5 T → OUTSIDE 69-1/8 × 36-1/2 309427-101 7.5 T → OUTSIDE 80-9/16 × 60-3/4 307175-102 10-15 T → OUTSIDE 77-3/4 × 74-1/2 308450-201
579E	Bryant	Legacy gas/electric	20-25 T → OUTSIDE 74-1/4 × 67-1/16 50PQ900221 4-5 T → OUTSIDE 70-1/2 × 62-1/2 304851-304
579F	Bryant	Legacy gas/electric	15-25 T → OUTSIDE 74-1/4 × 67-1/16 50PQ900221
580B	Bryant	Legacy gas/electric	3-6 T → OUTSIDE 70-7/8 × 46-9/16 314213-201 7.5-10 T → OUTSIDE 81-3/4 × 59-3/8 389004-201
580C	Bryant	Legacy gas/electric	3-6 T → OUTSIDE 70-7/8 × 40-11/16 CRRFCURB001A01 3-6 T → OUTSIDE 67-1/8 × 36-15/16 CRRFCURB001A00 7.5-12.5 T → OUTSIDE 81-3/4 × 53-1/2 CRRFCURB003A01
580D	Bryant	Legacy gas/electric	3-6 T → OUTSIDE 70-7/8 × 40-11/16 CRRFCURB001A01 3-6 T → OUTSIDE 67-1/8 × 36-15/16 CRRFCURB001A00 7.5-12.5 T → OUTSIDE 81-3/4 × 53-1/2 CRRFCURB003A01
580F	Bryant	Legacy gas/electric	3-6 T → OUTSIDE 67-1/8 × 36-15/16 CRRFCURB001A00 7.5-12.5 T → OUTSIDE 78 × 49-3/4 CRRFCURB003A00
581A	Bryant	Legacy gas/electric	3-6 T → OUTSIDE 67-1/8 × 36-15/16 CRRFCURB001A00 3-6 T → OUTSIDE 70-7/8 × 40-11/16 CRRFCURB001A01 7.5-12.5 T → OUTSIDE 78 × 49-3/4 CRRFCURB003A00 7.5-12.5 T → OUTSIDE 81-3/4 × 53-1/2 CRRFCURB003A01
581B	Bryant	Legacy gas/electric	3-6 T → OUTSIDE 67-1/8 × 36-15/16 CRRFCURB001A00 3-6 T → OUTSIDE 70-7/8 × 40-11/16 CRRFCURB001A01 7.5-12.5 T → OUTSIDE 78 × 49-3/4 CRRFCURB003A00 7.5-12.5 T → OUTSIDE 81-3/4 × 53-1/2 CRRFCURB003A01
581C	Bryant	Legacy gas/electric	2-5 T → OUTSIDE 67-1/8 × 36-15/16 CRRFCURB001A00
551A	Bryant	Legacy cooling/electric	3-6 T → OUTSIDE 67-1/8 × 36-15/16 CRRFCURB001A00 3-6 T → OUTSIDE 70-7/8 × 40-11/16 CRRFCURB001A01 7.5-12.5 T → OUTSIDE 78 × 49-3/4 CRRFCURB003A00 7.5-12.5 T → OUTSIDE 81-3/4 × 53-1/2 CRRFCURB003A01
551B	Bryant	Legacy cooling/electric	3-6 T → OUTSIDE 67-1/8 × 36-15/16 CRRFCURB001A00 3-6 T → OUTSIDE 70-7/8 × 40-11/16 CRRFCURB001A01 7.5-12.5 T → OUTSIDE 78 × 49-3/4 CRRFCURB003A00 7.5-12.5 T → OUTSIDE 81-3/4 × 53-1/2 CRRFCURB003A01
551C	Bryant	Legacy cooling/electric	2-5 T → OUTSIDE 67-1/8 × 36-15/16 CRRFCURB001A00
558B	Bryant	Legacy cooling/electric	3-6 T → OUTSIDE 70-7/8 × 46-9/16 314213-201 7.5-10 T → OUTSIDE 81-3/4 × 59-3/8 389004-201
558C	Bryant	Legacy cooling/electric	3-6 T → OUTSIDE 70-7/8 × 40-11/16 CRRFCURB001A01 3-6 T → OUTSIDE 67-1/8 × 36-15/16 CRRFCURB001A00 7.5-12.5 T → OUTSIDE 81-3/4 × 53-1/2 CRRFCURB003A01
558D	Bryant	Legacy cooling/electric	3-6 T → OUTSIDE 70-7/8 × 40-11/16 CRRFCURB001A01 3-6 T → OUTSIDE 67-1/8 × 36-15/16 CRRFCURB001A00 7.5-12.5 T → OUTSIDE 81-3/4 × 53-1/2 CRRFCURB003A01
558F	Bryant	Legacy cooling/electric	3-6 T → OUTSIDE 67-1/8 × 36-15/16 CRRFCURB001A00 3-6 T → OUTSIDE 70-7/8 × 40-11/16 CRRFCURB001A01 7.5-12.5 T → OUTSIDE 78 × 49-3/4 CRRFCURB003A00

Prefix	Brand	Generation	Curb on file (tons → OUTSIDE L × W, part)
559C	Bryant	Legacy cooling/electric	4-5 T → OUTSIDE 81-1/8 × 45-9/16 70849D01 7.5-12.5 T → OUTSIDE 84-7/16 × 60-5/8 70849DA2 15 T → OUTSIDE 102-3/8 × 69-5/8 70849DA3 20 T → OUTSIDE 150 × 69-3/8 70849D04 25 T → OUTSIDE 164-3/4 × 69-3/8 70849D05
559D	Bryant	Legacy cooling/electric	3 T → OUTSIDE 56-3/4 × 39-1/2 304851-301 3.5-5 T → OUTSIDE 68-3/4 × 44-1/2 304851-302 7.5-8.5 T → OUTSIDE 64-11/16 × 60-3/4 307175-103 10-15 T → OUTSIDE 77-3/4 × 74-1/2 308450-201
559E	Bryant	Legacy cooling/electric	3 T → OUTSIDE 58 × 43 Stiles Corp. curb 72-24-01 3.5-5 T → OUTSIDE 64 × 51-1/4 Stiles Corp. curb 72-24-02 7.5 T → OUTSIDE 64-11/16 × 60-3/4 307175-103
559F	Bryant	Legacy cooling/electric	15-25 T → OUTSIDE 74-1/4 × 67-1/16 50PQ900221
599C	Bryant	Legacy cooling/electric	4-5 T → OUTSIDE 81-1/8 × 45-9/16 70849D01 7.5-12.5 T → OUTSIDE 84-7/16 × 60-5/8 70849DA2 15 T → OUTSIDE 102-3/8 × 69-5/8 70849DA3 20 T → OUTSIDE 150 × 69-3/8 70849D04 25 T → OUTSIDE 164-3/4 × 69-3/8 70849D05
599D	Bryant	Legacy cooling/electric	10-15 T → OUTSIDE 77-3/4 × 74-1/2 308450-201 7.5-8.5 T → OUTSIDE 64-11/16 × 60-3/4 307175-103
599E	Bryant	Legacy cooling/electric	3 T → OUTSIDE 56-3/4 × 39-1/2 304851-301
542D	Bryant	Legacy heat pumps	3 T → OUTSIDE 56-3/4 × 39-1/2 304851-301 3.5-5 T → OUTSIDE 68-3/4 × 44-1/2 304851-302
542F	Bryant	Legacy heat pumps	10-15 T → OUTSIDE 77-3/4 × 74-1/2 308450-201
548B	Bryant	Legacy heat pumps	3-5 T → OUTSIDE 70-7/8 × 46-9/16 314213-201 7.5-10 T → OUTSIDE 81-3/4 × 59-3/8 389004-201
548C	Bryant	Legacy heat pumps	3-6 T → OUTSIDE 67-1/8 × 36-15/16 CRRFCURB001A00 3-6 T → OUTSIDE 70-7/8 × 40-11/16 CRRFCURB001A01 7.5-12.5 T → OUTSIDE 81-3/4 × 53-1/2 CRRFCURB003A01
548D	Bryant	Legacy heat pumps	3-6 T → OUTSIDE 67-1/8 × 36-15/16 CRRFCURB001A00 3-6 T → OUTSIDE 70-7/8 × 40-11/16 CRRFCURB001A01 7.5-12.5 T → OUTSIDE 78 × 49-3/4 CRRFCURB003A00 7.5-12.5 T → OUTSIDE 81-3/4 × 53-1/2 CRRFCURB003A01
548F	Bryant	Legacy heat pumps	3-6 T → OUTSIDE 67-1/8 × 36-15/16 CRRFCURB001A00 3-6 T → OUTSIDE 70-7/8 × 40-11/16 CRRFCURB001A01 7.5-12.5 T → OUTSIDE 78 × 49-3/4 CRRFCURB003A00 7.5-12.5 T → OUTSIDE 81-3/4 × 53-1/2 CRRFCURB003A01
549B	Bryant	Legacy heat pumps	3-6 T → OUTSIDE 67-1/8 × 36-15/16 CRRFCURB001A00 3-6 T → OUTSIDE 70-7/8 × 40-11/16 CRRFCURB001A01 7.5-12.5 T → OUTSIDE 78 × 49-3/4 CRRFCURB003A00 7.5-12.5 T → OUTSIDE 81-3/4 × 53-1/2 CRRFCURB003A01
549C	Bryant	Legacy heat pumps	2-5 T → OUTSIDE 67-1/8 × 36-15/16 CRRFCURB001A00
580J	Bryant	J / K generations	3-6 T → OUTSIDE 70-7/8 × 40-11/16 CRRFCURB001A01 7.5-12.5 T → OUTSIDE 81-3/4 × 53-1/2 CRRFCURB003A01 15 T → OUTSIDE 109-1/4 × 57-9/16 CRRFCURB074A00 15-17.5 T → OUTSIDE 121-5/8 × 80-5/8 CRRFCURB045A00 20-25 T → OUTSIDE 135-11/16 × 80-5/8 CRRFCURB047A00 25-27.5 T → OUTSIDE 151-15/16 × 80-5/8 CRRFCURB049A00
581J	Bryant	J / K generations	3-5 T → OUTSIDE 70-7/8 × 40-11/16 CRRFCURB001A01 6-10 T → OUTSIDE 81-3/4 × 53-1/2 CRRFCURB003A01 15 T → OUTSIDE 121-5/8 × 80-5/8 CRRFCURB045A00 17.5-20 T → OUTSIDE 135-11/16 × 80-5/8 CRRFCURB047A00 25 T → OUTSIDE 151-15/16 × 80-5/8 CRRFCURB049A00

Prefix	Brand	Generation	Curb on file (tons → OUTSIDE L × W, part)
582J	Bryant	J / K generations	3-5 T → OUTSIDE 70-7/8 × 40-11/16 CRRFCURB001A01
558J	Bryant	J / K generations	3-6 T → OUTSIDE 70-7/8 × 40-11/16 CRRFCURB001A01 7.5-12.5 T → OUTSIDE 81-3/4 × 53-1/2 CRRFCURB003A01
551J	Bryant	J / K generations	3-5 T → OUTSIDE 70-7/8 × 40-11/16 CRRFCURB001A01 6-10 T → OUTSIDE 81-3/4 × 53-1/2 CRRFCURB003A01 15 T → OUTSIDE 121-5/8 × 80-5/8 CRRFCURB045A00 17.5-20 T → OUTSIDE 135-11/16 × 80-5/8 CRRFCURB047A00 25 T → OUTSIDE 151-15/16 × 80-5/8 CRRFCURB049A00
559J	Bryant	J / K generations	3-6 T → OUTSIDE 70-7/8 × 40-11/16 CRRFCURB001A01 7.5-12.5 T → OUTSIDE 81-3/4 × 53-1/2 CRRFCURB003A01
547J	Bryant	J / K generations	3-6 T → OUTSIDE 70-7/8 × 40-11/16 CRRFCURB001A01
548J	Bryant	J / K generations	3-6 T → OUTSIDE 70-7/8 × 40-11/16 CRRFCURB001A01 7.5-12.5 T → OUTSIDE 81-3/4 × 53-1/2 CRRFCURB003A01 15 T → OUTSIDE 121-5/8 × 80-5/8 CRRFCURB045A00 20 T → OUTSIDE 135-11/16 × 80-5/8 CRRFCURB047A00
549J	Bryant	J / K generations	3-5 T → OUTSIDE 70-7/8 × 40-11/16 CRRFCURB001A01 6-10 T → OUTSIDE 81-3/4 × 53-1/2 CRRFCURB003A01
581K	Bryant	J / K generations	3-5 T → OUTSIDE 70-7/8 × 40-11/16 CRRFCURB001A01 6-12.5 T → OUTSIDE 81-3/4 × 53-1/2 CRRFCURB003A01
551K	Bryant	J / K generations	3-5 T → OUTSIDE 70-7/8 × 40-11/16 CRRFCURB001A01 6-12.5 T → OUTSIDE 81-3/4 × 53-1/2 CRRFCURB003A01
549K	Bryant	J / K generations	3-5 T → OUTSIDE 70-7/8 × 40-11/16 CRRFCURB001A01 6-10 T → OUTSIDE 81-3/4 × 53-1/2 CRRFCURB003A01
582K	Bryant	J / K generations	3-5 T → OUTSIDE 70-7/8 × 40-11/16 CRRFCURB001A01
559K	Bryant	J / K generations	3-6 T → OUTSIDE 70-7/8 × 40-11/16 CRRFCURB001A01 7.5-12.5 T → OUTSIDE 81-3/4 × 53-1/2 CRRFCURB003A01
581L	Bryant	Newer families	3-5 T → OUTSIDE 70-7/8 × 40-11/16 CRRFCURB001A01 6-10 T → OUTSIDE 81-3/4 × 53-1/2 CRRFCURB003A01
551L	Bryant	Newer families	3-5 T → OUTSIDE 70-7/8 × 40-11/16 CRRFCURB001A01 6-10 T → OUTSIDE 81-3/4 × 53-1/2 CRRFCURB003A01
549L	Bryant	Newer families	3-5 T → OUTSIDE 70-7/8 × 40-11/16 CRRFCURB001A01 6-10 T → OUTSIDE 81-3/4 × 53-1/2 CRRFCURB003A01 15 T → OUTSIDE 121-5/8 × 80-5/8 CRRFCURB045A00 17.5-20 T → OUTSIDE 135-11/16 × 80-5/8 CRRFCURB047A00 25 T → OUTSIDE 151-15/16 × 80-5/8 CRRFCURB049A00
582L	Bryant	Newer families	3-6 T → OUTSIDE 70-7/8 × 40-11/16 CRRFCURB001A01
559L	Bryant	Newer families	3-6 T → OUTSIDE 70-7/8 × 40-11/16 CRRFCURB001A01
547L	Bryant	Newer families	3-6 T → OUTSIDE 70-7/8 × 40-11/16 CRRFCURB001A01
549Q	Bryant	Newer families	3-5 T → OUTSIDE 70-7/8 × 40-11/16 CRRFCURB001A01 6-10 T → OUTSIDE 81-3/4 × 53-1/2 CRRFCURB003A01
BTC	Trane	Older packages	4-5 T → OUTSIDE 57-1/2 × 46-1/2 3-5, 4-5 T T curb 8.3 T → OUTSIDE 65-1/2 × 43-3/8 8.3, 8.5 T T curb 7.5-10 T → OUTSIDE 102-1/2 × 61-1/4 7.5-10 T T curb 7.5-10 T → OUTSIDE 81 × 64 7.5-10 T T curb 4-5 T → OUTSIDE 49-1/2 × 43-1/8 4-5 T T curb

Prefix	Brand	Generation	Curb on file (tons → OUTSIDE L × W, part)
BYC	Trane	Older packages	3-5 T → OUTSIDE 57-1/2 × 46-1/2 3-5, 4-5 T T curb 5 T → OUTSIDE 67-15/16 × 35-15/16 5 T T curb 7.5 T → OUTSIDE 65-1/2 × 43-3/8 7.5, 8.5 T T curb 8.3 T → OUTSIDE 65-1/2 × 43-3/8 8.3, 8.5 T T curb 10-10.8 T → OUTSIDE 75-1/2 × 53-3/4 10-10.8, 11 T T curb 12.5 T → OUTSIDE 71 × 60 10, 12.5, 12.5-14 T T curb 7.5-10 T → OUTSIDE 102-1/2 × 61-1/4 7.5-10 T T curb 7.5-10 T → OUTSIDE 81 × 64 7.5-10 T T curb
BWC	Trane	Older packages	4-5 T → OUTSIDE 57-1/2 × 46-1/2 3-5, 4-5 T T curb 7.5-10 T → OUTSIDE 102-1/2 × 61-1/4 7.5-10 T T curb 7.5-10 T → OUTSIDE 81 × 64 7.5-10 T T curb 12.5 T → OUTSIDE 81-5/8 × 62-3/4 12.5 T T curb 4-5 T → OUTSIDE 49-1/2 × 43-1/8 4-5 T T curb
SACA	Trane	Older packages	5 T → OUTSIDE 65-1/2 × 32-3/8 5 T T curb 7.5 T → OUTSIDE 65-1/2 × 43-3/8 7.5, 8.5 T T curb 10 T → OUTSIDE 75-1/2 × 54 10 T T curb 10 T → OUTSIDE 71 × 60 10, 12.5, 12.5-14 T T curb 12.5 T → OUTSIDE 71 × 60 10, 12.5, 12.5-14 T T curb
SACB	Trane	Older packages	8.5 T → OUTSIDE 65-1/2 × 43-3/8 7.5, 8.5 T T curb 11 T → OUTSIDE 75-1/2 × 53-3/4 10-10.8, 11 T T curb 10 T → OUTSIDE 73 × 62 10 T T curb
SACC	Trane	Older packages	7.5 T → OUTSIDE 65-1/2 × 43-3/8 7.5, 8.5 T T curb 10 T → OUTSIDE 75-1/2 × 54 10 T T curb 12.5-14 T → OUTSIDE 71 × 60 10, 12.5, 12.5-14 T T curb
SFCA	Trane	Older packages	5 T → OUTSIDE 65-1/2 × 32-3/8 5 T T curb 7.5 T → OUTSIDE 65-1/2 × 43-3/8 7.5, 8.5 T T curb 10 T → OUTSIDE 75-1/2 × 54 10 T T curb 10 T → OUTSIDE 71 × 60 10, 12.5, 12.5-14 T T curb 12.5 T → OUTSIDE 71 × 60 10, 12.5, 12.5-14 T T curb
SFCB	Trane	Older packages	7.5 T → OUTSIDE 65-1/2 × 43-3/8 7.5, 8.5 T T curb 8.5 T → OUTSIDE 65-1/2 × 43-3/8 7.5, 8.5 T T curb 10 T → OUTSIDE 75-1/2 × 54 10 T T curb 11 T → OUTSIDE 75-1/2 × 53-3/4 10-10.8, 11 T T curb 12.5 T → OUTSIDE 71 × 60 10, 12.5, 12.5-14 T T curb 12.5-14 T → OUTSIDE 71 × 60 10, 12.5, 12.5-14 T T curb
SFCC	Trane	Older packages	Not on file yet — Decoded (Trane SFCB nomenclature, SFCB-IOM-2A, hvac-talk attachment 840115): S = self-contained (packaged), F = cooling + gas heat, C = convertible downflow/horizontal, 4th letter = development sequence. So SFCC/SFCD are later design sequences of the Trane SFCA/SFCB packaged gas/electric rooftops - curb-mounted units, not split or indoor. No document found that names their curb; the SFCA/SFCB rows (curb-maker sheets) are the likely family. Still missing.
SFCD	Trane	Older packages	Not on file yet — Decoded (Trane SFCB nomenclature, SFCB-IOM-2A, hvac-talk attachment 840115): S = self-contained (packaged), F = cooling + gas heat, C = convertible downflow/horizontal, 4th letter = development sequence. So SFCC/SFCD are later design sequences of the Trane SFCA/SFCB packaged gas/electric rooftops - curb-mounted units, not split or indoor. No document found that names their curb; the SFCA/SFCB rows (curb-maker sheets) are the likely family. Still missing.
SPCA	Trane	Older packages	10 T → OUTSIDE 73 × 62 10 T T curb 12.5 T → OUTSIDE 83 × 64-1/2 12.5 T T curb
SPCB	Trane	Older packages	12.5 T → OUTSIDE 83 × 64-1/2 12.5 T T curb
SPCC	Trane	Older packages	12.5 T → OUTSIDE 83 × 64-1/2 12.5 T T curb
SADB	Trane	Older packages	8.5 T → OUTSIDE 65-1/2 × 43-3/8 8.3, 8.5 T T curb
SEDB	Trane	Older packages	8.5 T → OUTSIDE 65-1/2 × 43-3/8 8.3, 8.5 T T curb
SFDB	Trane	Older packages	8.5 T → OUTSIDE 65-1/2 × 43-3/8 8.3, 8.5 T T curb 5 T → OUTSIDE 67-15/16 × 35-15/16 5 T T curb

Prefix	Brand	Generation	Curb on file (tons → OUTSIDE L × W, part)
YCD	Trane	Voyager gas/electric	3-5 T → OUTSIDE 77-5/8 × 43-3/8 BAYCURB021* 5-10 T → OUTSIDE 81-5/8 × 46-3/8 BAYCURB022* 8.3-12.5 T → OUTSIDE 89-1/4 × 59-7/16 BAYCURB025* 10-17.5 T → OUTSIDE 102-1/4 × 67 BAYCURB026B 15-25 T → OUTSIDE 117-3/16 × 81 BAYCURB027B
YCH	Trane	Voyager gas/electric	3-5 T → OUTSIDE 77-5/8 × 43-3/8 BAYCURB021* 5-10 T → OUTSIDE 81-5/8 × 46-3/8 BAYCURB022* 8.3-12.5 T → OUTSIDE 89-1/4 × 59-7/16 BAYCURB025* 10-17.5 T → OUTSIDE 102-1/4 × 67 BAYCURB026B 15-25 T → OUTSIDE 117-3/16 × 81 BAYCURB027B
YSD	Trane	Voyager gas/electric	12.5 T → OUTSIDE 102-1/4 × 67 BAYCURB026B 15-25 T → OUTSIDE 117-3/16 × 81 BAYCURB027B
YSH	Trane	Voyager gas/electric	12.5 T → OUTSIDE 102-1/4 × 67 BAYCURB026B 15-25 T → OUTSIDE 117-3/16 × 81 BAYCURB027B
YHD	Trane	Voyager gas/electric	12.5 T → OUTSIDE 102-1/4 × 67 BAYCURB026B 15-25 T → OUTSIDE 117-3/16 × 81 BAYCURB027B
YHH	Trane	Voyager gas/electric	12.5 T → OUTSIDE 102-1/4 × 67 BAYCURB026B 15-25 T → OUTSIDE 117-3/16 × 81 BAYCURB027B
TCD	Trane	Voyager cooling/electric	3-5 T → OUTSIDE 77-5/8 × 43-3/8 BAYCURB021* 5-10 T → OUTSIDE 81-5/8 × 46-3/8 BAYCURB022* 8.3-12.5 T → OUTSIDE 89-1/4 × 59-7/16 BAYCURB025* 10-17.5 T → OUTSIDE 102-1/4 × 67 BAYCURB026B 15-25 T → OUTSIDE 117-3/16 × 81 BAYCURB027B 3-5 T → OUTSIDE 48-3/4 × 45-3/4 3-5 T T curb
TCH	Trane	Voyager cooling/electric	3-5 T → OUTSIDE 77-5/8 × 43-3/8 BAYCURB021* 5-10 T → OUTSIDE 81-5/8 × 46-3/8 BAYCURB022* 8.3-12.5 T → OUTSIDE 89-1/4 × 59-7/16 BAYCURB025* 10-17.5 T → OUTSIDE 102-1/4 × 67 BAYCURB026B 15-25 T → OUTSIDE 117-3/16 × 81 BAYCURB027B
TED	Trane	Voyager cooling/electric	Not on file yet — out of scope >27 T
TEH	Trane	Voyager cooling/electric	Not on file yet — out of scope >27 T
TSD	Trane	Voyager cooling/electric	12.5 T → OUTSIDE 102-1/4 × 67 BAYCURB026B 15-25 T → OUTSIDE 117-3/16 × 81 BAYCURB027B
TSH	Trane	Voyager cooling/electric	12.5 T → OUTSIDE 102-1/4 × 67 BAYCURB026B 15-25 T → OUTSIDE 117-3/16 × 81 BAYCURB027B
THD	Trane	Voyager cooling/electric	12.5 T → OUTSIDE 102-1/4 × 67 BAYCURB026B 15-25 T → OUTSIDE 117-3/16 × 81 BAYCURB027B
THH	Trane	Voyager cooling/electric	12.5 T → OUTSIDE 102-1/4 × 67 BAYCURB026B 15-25 T → OUTSIDE 117-3/16 × 81 BAYCURB027B
WCD	Trane	Voyager heat pumps	3-5 T → OUTSIDE 77-5/8 × 43-3/8 BAYCURB021* 6-7.5 T → OUTSIDE 81-5/8 × 46-3/8 BAYCURB022* 10 T → OUTSIDE 89-1/4 × 59-7/16 BAYCURB025* 12.5-15 T → OUTSIDE 102-1/4 × 67 BAYCURB026B 3-5 T → OUTSIDE 48-3/4 × 45-3/4 3-5 T T curb
WCH	Trane	Voyager heat pumps	3-5 T → OUTSIDE 77-5/8 × 43-3/8 BAYCURB021* 6-7.5 T → OUTSIDE 81-5/8 × 46-3/8 BAYCURB022* 10 T → OUTSIDE 89-1/4 × 59-7/16 BAYCURB025* 12.5-15 T → OUTSIDE 102-1/4 × 67 BAYCURB026B
WSD	Trane	Voyager heat pumps	12.5-20 T → OUTSIDE 102-1/4 × 67 BAYCURB026B 12.5-20 T → OUTSIDE 117-3/16 × 81 BAYCURB027B
WSH	Trane	Voyager heat pumps	12.5-20 T → OUTSIDE 102-1/4 × 67 BAYCURB026B 12.5-20 T → OUTSIDE 117-3/16 × 81 BAYCURB027B

Prefix	Brand	Generation	Curb on file (tons → OUTSIDE L × W, part)
YSC	Trane	Precedent gas/electric	3-5 T → OUTSIDE 65-13/16 × 41-7/16 BAYCURB042A 6-10 T → OUTSIDE 84-1/2 × 50-3/8 BAYCURB043A
YHC	Trane	Precedent gas/electric	3 T → OUTSIDE 65-13/16 × 41-7/16 BAYCURB042A 4-8.5 T → OUTSIDE 84-1/2 × 50-3/8 BAYCURB043A 7.5-10 T → OUTSIDE 84-1/2 × 60-3/8 BAYCURB044A
YZC	Trane	Precedent gas/electric	3 T → OUTSIDE 65-13/16 × 41-7/16 BAYCURB042A 4-10 T → OUTSIDE 84-1/2 × 50-3/8 BAYCURB043A 10 T → OUTSIDE 84-1/2 × 60-3/8 BAYCURB044A
YSJ	Trane	Precedent gas/electric	6-10 T → OUTSIDE 84-1/2 × 50-3/8 BAYCURB043A 12.5 T → OUTSIDE 84-1/2 × 60-3/8 BAYCURB044A 15-25 T → OUTSIDE 117-3/16 × 81 BAYCURB027B
YHJ	Trane	Precedent gas/electric	6-10 T → OUTSIDE 84-1/2 × 50-3/8 BAYCURB043A 12.5 T → OUTSIDE 84-1/2 × 60-3/8 BAYCURB044A 15-25 T → OUTSIDE 117-3/16 × 81 BAYCURB027B
YZJ	Trane	Precedent gas/electric	12.5-25 T → OUTSIDE 117-3/16 × 81 BAYCURB027B
YSK	Trane	Precedent gas/electric	3-5 T → OUTSIDE 65-13/16 × 41-7/16 BAYCURB042A 6-10 T → OUTSIDE 84-1/2 × 50-3/8 BAYCURB043A 12.5 T → OUTSIDE 84-1/2 × 60-3/8 BAYCURB044A 15-25 T → OUTSIDE 117-3/16 × 81 BAYCURB027B
YHK	Trane	Precedent gas/electric	3 T → OUTSIDE 65-13/16 × 41-7/16 BAYCURB042A 4-10 T → OUTSIDE 84-1/2 × 50-3/8 BAYCURB043A 12.5-25 T → OUTSIDE 117-3/16 × 81 BAYCURB027B
YZK	Trane	Precedent gas/electric	3-8.5 T → OUTSIDE 84-1/2 × 50-3/8 BAYCURB043A 10 T → OUTSIDE 84-1/2 × 60-3/8 BAYCURB044A 12.5-25 T → OUTSIDE 117-3/16 × 81 BAYCURB027B
TSC	Trane	Precedent cooling/electric	3-5 T → OUTSIDE 65-13/16 × 41-7/16 BAYCURB042A 6-10 T → OUTSIDE 84-1/2 × 50-3/8 BAYCURB043A
THC	Trane	Precedent cooling/electric	3 T → OUTSIDE 65-13/16 × 41-7/16 BAYCURB042A 4-8.5 T → OUTSIDE 84-1/2 × 50-3/8 BAYCURB043A 7.5-10 T → OUTSIDE 84-1/2 × 60-3/8 BAYCURB044A
TZC	Trane	Precedent cooling/electric	3 T → OUTSIDE 65-13/16 × 41-7/16 BAYCURB042A 4-10 T → OUTSIDE 84-1/2 × 50-3/8 BAYCURB043A 10 T → OUTSIDE 84-1/2 × 60-3/8 BAYCURB044A
TSJ	Trane	Precedent cooling/electric	6-10 T → OUTSIDE 84-1/2 × 50-3/8 BAYCURB043A 12.5 T → OUTSIDE 84-1/2 × 60-3/8 BAYCURB044A 15-25 T → OUTSIDE 117-3/16 × 81 BAYCURB027B
THJ	Trane	Precedent cooling/electric	6-10 T → OUTSIDE 84-1/2 × 50-3/8 BAYCURB043A 12.5 T → OUTSIDE 84-1/2 × 60-3/8 BAYCURB044A 15-25 T → OUTSIDE 117-3/16 × 81 BAYCURB027B
TZJ	Trane	Precedent cooling/electric	12.5-25 T → OUTSIDE 117-3/16 × 81 BAYCURB027B
TSK	Trane	Precedent cooling/electric	3-5 T → OUTSIDE 65-13/16 × 41-7/16 BAYCURB042A 6-10 T → OUTSIDE 84-1/2 × 50-3/8 BAYCURB043A 12.5 T → OUTSIDE 84-1/2 × 60-3/8 BAYCURB044A 15-25 T → OUTSIDE 117-3/16 × 81 BAYCURB027B
THK	Trane	Precedent cooling/electric	3 T → OUTSIDE 65-13/16 × 41-7/16 BAYCURB042A 4-10 T → OUTSIDE 84-1/2 × 50-3/8 BAYCURB043A 12.5-25 T → OUTSIDE 117-3/16 × 81 BAYCURB027B
TZK	Trane	Precedent cooling/electric	3-8.5 T → OUTSIDE 84-1/2 × 50-3/8 BAYCURB043A 10 T → OUTSIDE 84-1/2 × 60-3/8 BAYCURB044A 12.5-25 T → OUTSIDE 117-3/16 × 81 BAYCURB027B
WSC	Trane	Precedent HP / dual fuel	3-5 T → OUTSIDE 65-13/16 × 41-7/16 BAYCURB042A 5-10 T → OUTSIDE 84-1/2 × 50-3/8 BAYCURB043A

Prefix	Brand	Generation	Curb on file (tons → OUTSIDE L × W, part)
WHC	Trane	Precedent HP / dual fuel	3 T → OUTSIDE 65-13/16 × 41-7/16 BAYCURB042A 4-8.5 T → OUTSIDE 84-1/2 × 50-3/8 BAYCURB043A 10 T → OUTSIDE 84-1/2 × 60-3/8 BAYCURB044A
DHC	Trane	Precedent HP / dual fuel	3 T → OUTSIDE 65-13/16 × 41-7/16 BAYCURB042A 4-8.5 T → OUTSIDE 84-1/2 × 50-3/8 BAYCURB043A 10 T → OUTSIDE 84-1/2 × 60-3/8 BAYCURB044A
WSJ	Trane	Precedent HP / dual fuel	12.5-25 T → OUTSIDE 117-3/16 × 81 BAYCURB027B
WHJ	Trane	Precedent HP / dual fuel	12.5-25 T → OUTSIDE 117-3/16 × 81 BAYCURB027B
DSJ	Trane	Precedent HP / dual fuel	12.5-25 T → OUTSIDE 117-3/16 × 81 BAYCURB027B
DHJ	Trane	Precedent HP / dual fuel	12.5-25 T → OUTSIDE 117-3/16 × 81 BAYCURB027B
WSK	Trane	Precedent HP / dual fuel	3-5 T → OUTSIDE 65-13/16 × 41-7/16 BAYCURB042A 6-10 T → OUTSIDE 84-1/2 × 50-3/8 BAYCURB043A 12.5-25 T → OUTSIDE 117-3/16 × 81 BAYCURB027B
WHK	Trane	Precedent HP / dual fuel	3-8.5 T → OUTSIDE 84-1/2 × 50-3/8 BAYCURB043A 10 T → OUTSIDE 84-1/2 × 60-3/8 BAYCURB044A 12.5-25 T → OUTSIDE 117-3/16 × 81 BAYCURB027B
DSK	Trane	Precedent HP / dual fuel	6-8.5 T → OUTSIDE 84-1/2 × 50-3/8 BAYCURB043A 12.5-25 T → OUTSIDE 117-3/16 × 81 BAYCURB027B
DHK	Trane	Precedent HP / dual fuel	3-8.5 T → OUTSIDE 84-1/2 × 50-3/8 BAYCURB043A 12.5-25 T → OUTSIDE 117-3/16 × 81 BAYCURB027B
GBC	Trane	Foundation	3-5 T → OUTSIDE 70-7/8 × 42 BAYCURB320* 7.5-12.5 T → OUTSIDE 81-7/8 × 53-5/8 BAYCURB310*
GCC	Trane	Foundation	15-25 T → OUTSIDE 117-3/16 × 81 BAYCURB027B
GDC	Trane	Foundation	3-5 T → OUTSIDE 70-7/8 × 42 BAYCURB320*
GDK	Trane	Foundation	3-5 T → OUTSIDE 70-7/8 × 42 BAYCURB320* 7.5-12.5 T → OUTSIDE 81-7/8 × 53-5/8 BAYCURB310* 15-25 T → OUTSIDE 117-3/16 × 81 BAYCURB027B
EBC	Trane	Foundation	3-5 T → OUTSIDE 70-7/8 × 42 BAYCURB320* 7.5-12.5 T → OUTSIDE 81-7/8 × 53-5/8 BAYCURB310*
ECC	Trane	Foundation	15-25 T → OUTSIDE 117-3/16 × 81 BAYCURB027B
EDC	Trane	Foundation	3-5 T → OUTSIDE 70-7/8 × 42 BAYCURB320*
EDK	Trane	Foundation	3-5 T → OUTSIDE 70-7/8 × 42 BAYCURB320* 7.5-12.5 T → OUTSIDE 81-7/8 × 53-5/8 BAYCURB310* 15-25 T → OUTSIDE 117-3/16 × 81 BAYCURB027B
GCS3	Lennox	Older gas/electric	7.5-8 T → OUTSIDE 86-3/4 × 47-3/4 RMF3-95 10-11 T → OUTSIDE 106-1/4 × 56-3/4 RMF3-135 15-22.5 T → OUTSIDE 126-1/2 × 76-3/4 RMF3-185/275 4-5 T → OUTSIDE 78-5/8 × 68-1/4 4-5 T T curb
GCS10	Lennox	Older gas/electric	3-5 T → OUTSIDE 75-3/4 × 51-1/2 RMFG10-65
GCS11	Lennox	Older gas/electric	7.5-8 T → OUTSIDE 102-5/8 × 41-5/8 RMFG11-95 10-11 T → OUTSIDE 108-1/8 × 59-5/8 RMFG11-135 15 T → OUTSIDE 108-1/8 × 59-5/8 RMF11-185 22.5 T → OUTSIDE 133-11/16 × 69-5/8 RMF11-275
GCS16	Lennox	Older gas/electric	3 T → OUTSIDE 56-3/8 × 44-1/8 RMF16-41 4-5 T → OUTSIDE 69 × 50-1/2 RMF16-65 6-7.5 T → OUTSIDE 87-1/8 × 46-5/8 RMF16-09 10-12.5 T → OUTSIDE 92-1/2 × 58-1/2 RMF16-12 15-20 T → OUTSIDE 121-1/8 × 63-7/8 RMF16-18/24
GCS20R	Lennox	Older gas/electric	3 T → OUTSIDE 56-3/8 × 44-1/8 RMF16-41 3.5-5 T → OUTSIDE 56-3/8 × 44-1/8 RMF16-41 3.5-5 T → OUTSIDE 69 × 50-1/2 RMF16-65

Prefix	Brand	Generation	Curb on file (tons → OUTSIDE L × W, part)
GCS24	Lennox	Older gas/electric	7.5 T → OUTSIDE 87-1/8 × 46-5/8 RMF16-95
CHA8	Lennox	Older cooling / heat pump	7.5-8 T → OUTSIDE 86-3/4 × 47-3/4 RMF3-95 10-11 T → OUTSIDE 106-1/4 × 56-3/4 RMF3-135 15-22.5 T → OUTSIDE 126-1/2 × 76-3/4 RMF3-185/275 4-5 T → OUTSIDE 78-5/8 × 68-1/4 4-5 T T curb
CHA11	Lennox	Older cooling / heat pump	7.5 T → OUTSIDE 79-5/8 × 41-5/8 RMF11-95 roof mounting frame 10 T → OUTSIDE 85-1/8 × 59-5/8 RMF11-135 roof mounting frame 15 T → OUTSIDE 108-1/8 × 59-5/8 RMF11-185 22.5 T → OUTSIDE 133-11/16 × 69-5/8 RMF11-275
CHA16	Lennox	Older cooling / heat pump	3 T → OUTSIDE 56-3/8 × 44-1/8 RMF16-41 4-5 T → OUTSIDE 56-3/8 × 44-1/8 RMF16-41 4-5 T → OUTSIDE 69 × 50-1/2 RMF16-65
CHA24	Lennox	Older cooling / heat pump	7.5 T → OUTSIDE 87-1/8 × 46-5/8 RMF16-95
CHP8	Lennox	Older cooling / heat pump	7.5-8 T → OUTSIDE 86-3/4 × 47-3/4 RMF3-95 10-11 T → OUTSIDE 106-1/4 × 56-3/4 RMF3-135 15-22.5 T → OUTSIDE 126-1/2 × 76-3/4 RMF3-185/275 4-5 T → OUTSIDE 78-5/8 × 68-1/4 4-5 T T curb
CHP11	Lennox	Older cooling / heat pump	7.5 T → OUTSIDE 79-5/8 × 41-5/8 RMF11-95 roof mounting frame 10 T → OUTSIDE 85-1/8 × 59-5/8 RMF11-135 roof mounting frame 15 T → OUTSIDE 108-1/8 × 59-5/8 RMF11-185 22.5 T → OUTSIDE 133-11/16 × 69-5/8 RMF11-275
CHP16	Lennox	Older cooling / heat pump	3 T → OUTSIDE 56-3/8 × 44-1/8 RMF16-41 4-5 T → OUTSIDE 56-3/8 × 44-1/8 RMF16-41 4-5 T → OUTSIDE 69 × 50-1/2 RMF16-65 7.5 T → OUTSIDE 87-1/8 × 46-5/8 RMF16-95 10-12.5 T → OUTSIDE 92-1/2 × 58-1/2 RMF16-12 15-20 T → OUTSIDE 121-1/8 × 63-7/8 RMF16-18/24
CHP20	Lennox	Older cooling / heat pump	3 T → OUTSIDE 56-3/8 × 44-1/8 RMF16-41 4-5 T → OUTSIDE 56-3/8 × 44-1/8 RMF16-41 4-5 T → OUTSIDE 69 × 50-1/2 RMF16-65
GHP16	Lennox	Older cooling / heat pump	10 T → OUTSIDE 92-1/2 × 58-1/2 RMF16-12
LGA	Lennox	L-Series / T-Series	3-6 T → OUTSIDE 82-1/8 × 41-1/8 LARMF03/07S-14 7.5-8.5 T → OUTSIDE 95-7/8 × 43-7/8 LARMF08/10-14 7.5-12.5 T → OUTSIDE 95-3/8 × 54-1/4 LARMF10/15S-14 13-25 T → OUTSIDE 102-1/8 × 86-1/4 LARMF18/36-14
LGB	Lennox	L-Series / T-Series	3-5 T → OUTSIDE 77-1/8 × 47-3/8 Roof mounting frame with double duct opening, LGB/LGE036H-060H 10 T → OUTSIDE 86-1/4 × 54-1/4 Roof mounting frame with double duct opening, LGB/LGE120H 20 T → OUTSIDE 102-5/8 × 86-1/4 Roof mounting frame with double duct opening, LGB/LGE240H
LGC	Lennox	L-Series / T-Series	21-27 T → OUTSIDE 115-1/8 × 86-1/4 LARMF30/36S-14
LGE	Lennox	L-Series / T-Series	3-5 T → OUTSIDE 77-1/8 × 47-3/8 Roof mounting frame with double duct opening, LGB/LGE036H-060H 10 T → OUTSIDE 86-1/4 × 54-1/4 Roof mounting frame with double duct opening, LGB/LGE120H 20 T → OUTSIDE 102-5/8 × 86-1/4 Roof mounting frame with double duct opening, LGB/LGE240H
LCA	Lennox	L-Series / T-Series	3-6 T → OUTSIDE 82-1/8 × 41-1/8 LARMF03/07S-14 7.5-8.5 T → OUTSIDE 95-7/8 × 43-7/8 LARMF08/10-14 7.5-12.5 T → OUTSIDE 95-3/8 × 54-1/4 LARMF10/15S-14 13-25 T → OUTSIDE 102-1/8 × 86-1/4 LARMF18/36-14
LCB	Lennox	L-Series / T-Series	3-5 T → OUTSIDE 77-1/8 × 47-3/8 Roof mounting frame with double duct opening, LGB/LGE036H-060H 10 T → OUTSIDE 86-1/4 × 54-1/4 Roof mounting frame with double duct opening, LGB/LGE120H 20 T → OUTSIDE 102-5/8 × 86-1/4 Roof mounting frame with double duct opening, LGB/LGE240H
LCC	Lennox	L-Series / T-Series	21-27 T → OUTSIDE 115-1/8 × 86-1/4 LARMF30/36S-14
LCE	Lennox	L-Series / T-Series	3-5 T → OUTSIDE 77-1/8 × 47-3/8 Roof mounting frame with double duct opening, LGB/LGE036H-060H 10 T → OUTSIDE 86-1/4 × 54-1/4 Roof mounting frame with double duct opening, LGB/LGE120H 20 T → OUTSIDE 102-5/8 × 86-1/4 Roof mounting frame with double duct opening, LGB/LGE240H

Prefix	Brand	Generation	Curb on file (tons → OUTSIDE L × W, part)
LHA	Lennox	L-Series / T-Series	3-6 T → OUTSIDE 82-1/8 × 41-1/8 LARMF03/07S-14 7.5-8.5 T → OUTSIDE 95-7/8 × 43-7/8 LARMF08/10-14 7.5-12.5 T → OUTSIDE 95-3/8 × 54-1/4 LARMF10/15S-14 13-25 T → OUTSIDE 102-1/8 × 86-1/4 LARMF18/36-14
LHC	Lennox	L-Series / T-Series	21-27 T → OUTSIDE 115-1/8 × 86-1/4 LARMF30/36S-14
TGA	Lennox	L-Series / T-Series	3-6 T → OUTSIDE 79-3/4 × 41-1/2 T1CURB23AN1 7.5-12.5 T → OUTSIDE 95-3/8 × 54-1/4 LARMF10/15S-14 15-20 T → OUTSIDE 102-1/8 × 86-1/4 LARMF18/36-14
TCA	Lennox	L-Series / T-Series	3-6 T → OUTSIDE 79-3/4 × 41-1/2 T1CURB23AN1 7.5-12.5 T → OUTSIDE 95-3/8 × 54-1/4 LARMF10/15S-14 15-20 T → OUTSIDE 102-1/8 × 86-1/4 LARMF18/36-14
THA	Lennox	L-Series / T-Series	3-6 T → OUTSIDE 79-3/4 × 41-1/2 T1CURB23AN1 7.5-12.5 T → OUTSIDE 95-3/8 × 54-1/4 LARMF10/15S-14
LGH	Lennox	Energence / S-families	3-6 T → OUTSIDE 79-3/4 × 41-1/2 C1CURB70A-1 7.5-12.5 T → OUTSIDE 95-3/8 × 54-1/4 C1CURB70B-1 11F54 13-25 T → OUTSIDE 102 × 86-1/8 C1CURB70C-1 11F58
LCH	Lennox	Energence / S-families	3-6 T → OUTSIDE 79-3/4 × 41-1/2 C1CURB70A-1 7.5-12.5 T → OUTSIDE 95-3/8 × 54-1/4 C1CURB70B-1 11F54 13-25 T → OUTSIDE 102 × 86-1/8 C1CURB70C-1 11F58
SGA	Lennox	Energence / S-families	20 T → OUTSIDE 102-1/8 × 86-1/4 LARMF18/36-14 20 T → OUTSIDE 115-1/8 × 86-1/4 LARMF30/36S-14
SGB	Lennox	Energence / S-families	24 T → OUTSIDE 102-1/8 × 86-1/4 LARMF18/36-14 24 T → OUTSIDE 115-1/8 × 86-1/4 LARMF30/36S-14
SGC	Lennox	Energence / S-families	3-5 T → OUTSIDE 77-1/8 × 47-3/8 11F70 10 T → OUTSIDE 86-1/4 × 53-7/8 11F72 20 T → OUTSIDE 115-1/8 × 86-1/8 11F74 24 T → OUTSIDE 115-1/8 × 86-1/8 11F62
SCC	Lennox	Energence / S-families	3-5 T → OUTSIDE 77-1/8 × 47-3/8 11F70 10 T → OUTSIDE 86-1/4 × 53-7/8 11F72 20 T → OUTSIDE 115-1/8 × 86-1/8 11F74 24 T → OUTSIDE 115-1/8 × 86-1/8 11F62
SGH	Lennox	Energence / S-families	3-5 T → OUTSIDE 77-1/8 × 47-3/8 11F70 10 T → OUTSIDE 86-1/4 × 53-7/8 11F72 20 T → OUTSIDE 115-1/8 × 86-1/8 11F74
SCH	Lennox	Energence / S-families	3-5 T → OUTSIDE 77-1/8 × 47-3/8 11F70 10 T → OUTSIDE 86-1/4 × 53-7/8 11F72 20 T → OUTSIDE 115-1/8 × 86-1/8 11F74
KGA	Lennox	Landmark	3-6 T → OUTSIDE 79-3/4 × 41-1/2 C1CURB70A-1 7.5 T → OUTSIDE 92-3/4 × 41-1/2 K1CURB70AP1 7.5-12.5 T → OUTSIDE 95-3/8 × 54-1/4 C1CURB70B-1 11F54 13-25 T → OUTSIDE 102 × 86-1/8 C1CURB70C-1 11F58
KGB	Lennox	Landmark	7.5-12.5 T → OUTSIDE 95-3/8 × 54-1/4 C1CURB70B-1 11F54 13-25 T → OUTSIDE 102 × 86-1/8 C1CURB70C-1 11F58
KGC	Lennox	Landmark	7.5-12.5 T → OUTSIDE 95-3/8 × 54-1/4 C1CURB70B-1 11F54 15-25 T → OUTSIDE 102 × 86-1/8 C1CURB70C-1 11F58
KCA	Lennox	Landmark	3-6 T → OUTSIDE 79-3/4 × 41-1/2 C1CURB70A-1 7.5 T → OUTSIDE 92-3/4 × 41-1/2 K1CURB70AP1 7.5-12.5 T → OUTSIDE 95-3/8 × 54-1/4 C1CURB70B-1 11F54 13-25 T → OUTSIDE 102 × 86-1/8 C1CURB70C-1 11F58
KCB	Lennox	Landmark	7.5-12.5 T → OUTSIDE 95-3/8 × 54-1/4 C1CURB70B-1 11F54
KCC	Lennox	Landmark	7.5-12.5 T → OUTSIDE 95-3/8 × 54-1/4 C1CURB70B-1 11F54 15-25 T → OUTSIDE 102 × 86-1/8 C1CURB70C-1 11F58

Prefix	Brand	Generation	Curb on file (tons → OUTSIDE L × W, part)
KHA	Lennox	Landmark	3-6 T → OUTSIDE 79-3/4 × 41-1/2 C1CURB70A-1 7.5-12.5 T → OUTSIDE 95-3/8 × 54-1/4 C1CURB70B-1 11F54
KHB	Lennox	Landmark	3-5 T → OUTSIDE 79-3/4 × 41-1/2 C1CURB70A-1 7.5-12.5 T → OUTSIDE 95-3/8 × 54-1/4 C1CURB70B-1 11F54
KHC	Lennox	Landmark	7.5-10 T → OUTSIDE 95-3/8 × 54-1/4 C1CURB70B-1 11F54 15-20 T → OUTSIDE 102 × 86-1/8 C1CURB70C-1 11F58
ZGA	Lennox	Raider	3-6 T → OUTSIDE 71 × 42-5/16 Z1CURB70A-1 7.5-12.5 T → OUTSIDE 89-3/8 × 54-1/8 10Z25
ZGB	Lennox	Raider	3-6 T → OUTSIDE 71 × 42-5/16 Z1CURB70A-1 7.5-12.5 T → OUTSIDE 89-3/8 × 54-1/8 10Z25
ZGC	Lennox	Raider	7.5-12.5 T → OUTSIDE 89-3/8 × 54-1/8 10Z25
ZGD	Lennox	Raider	3-6 T → OUTSIDE 71 × 42-5/16 Lennox cat. 11F76 7.5-12.5 T → OUTSIDE 89-3/8 × 54-1/8 10Z25
ZCA	Lennox	Raider	3-6 T → OUTSIDE 71 × 42-5/16 Z1CURB70A-1 7.5-12.5 T → OUTSIDE 89-3/8 × 54-1/8 10Z25
ZCB	Lennox	Raider	3-6 T → OUTSIDE 71 × 42-5/16 Z1CURB70A-1 7.5-12.5 T → OUTSIDE 89-3/8 × 54-1/8 10Z25
ZCC	Lennox	Raider	7.5-12.5 T → OUTSIDE 89-3/8 × 54-1/8 10Z25
ZCD	Lennox	Raider	3-6 T → OUTSIDE 71 × 42-5/16 Lennox cat. 11F76 7.5-12.5 T → OUTSIDE 89-3/8 × 54-1/8 10Z25
ZHA	Lennox	Raider	3-5 T → OUTSIDE 71 × 42-5/16 Z1CURB70A-1
ZHB	Lennox	Raider	3-5 T → OUTSIDE 71 × 42-5/16 Z1CURB70A-1
ZHC	Lennox	Raider	7.5-12.5 T → OUTSIDE 89-3/8 × 54-1/8 10Z25
ZHD	Lennox	Raider	3-5 T → OUTSIDE 71 × 42-5/16 Lennox cat. 11F76 7.5-10 T → OUTSIDE 89-3/8 × 54-1/8 10Z25
LGM	Lennox	Model L / Enlight	3-6 T → OUTSIDE 79-3/4 × 41-1/2 C1CURB70A-1 7.5-12.5 T → OUTSIDE 95-3/8 × 54-1/4 C1CURB70B-1 11F54 13-25 T → OUTSIDE 102 × 86-1/8 C1CURB70C-1 11F58
LCM	Lennox	Model L / Enlight	3-6 T → OUTSIDE 79-3/4 × 41-1/2 C1CURB70A-1 7.5-12.5 T → OUTSIDE 95-3/8 × 54-1/4 C1CURB70B-1 11F54 13-25 T → OUTSIDE 102 × 86-1/8 C1CURB70C-1 11F58
LGT	Lennox	Model L / Enlight	3-6 T → OUTSIDE 79-3/4 × 41-1/2 C1CURB70A-1 7.5-12.5 T → OUTSIDE 95-3/8 × 54-1/4 C1CURB70B-1 11F54 13-25 T → OUTSIDE 102 × 86-1/8 C1CURB70C-1 11F58 25-27 T → OUTSIDE 115-1/8 × 86-1/8 11F62
LCT	Lennox	Model L / Enlight	3-6 T → OUTSIDE 79-3/4 × 41-1/2 C1CURB70A-1 7.5-12.5 T → OUTSIDE 95-3/8 × 54-1/4 C1CURB70B-1 11F54 25-27 T → OUTSIDE 115-1/8 × 86-1/8 11F62
LHT	Lennox	Model L / Enlight	3-6 T → OUTSIDE 79-3/4 × 41-1/2 C1CURB70A-1 25 T → OUTSIDE 115-1/8 × 86-1/8 11F62 6.5-12.5 T → OUTSIDE 95-3/8 × 54-1/4 C1CURB70B-1 11F54 25 (horizontal curb) T → OUTSIDE 102-1/8 × 86-1/4 11T90
LDT	Lennox	Model L / Enlight	3-6 T → OUTSIDE 79-3/4 × 41-1/2 C1CURB70A-1 13-25 T → OUTSIDE 102 × 86-1/8 C1CURB70C-1 11F58
LGX	Lennox	Xion / smaller packages	3-6 T → OUTSIDE 79-3/4 × 41-1/2 C1CURB70A-1 7.5-12.5 T → OUTSIDE 95-3/8 × 54-1/4 C1CURB70B-1 11F54 13-25 T → OUTSIDE 102 × 86-1/8 C1CURB70C-1 11F58
LCX	Lennox	Xion / smaller packages	3-6 T → OUTSIDE 79-3/4 × 41-1/2 C1CURB70A-1 7.5-12.5 T → OUTSIDE 95-3/8 × 54-1/4 C1CURB70B-1 11F54 13-25 T → OUTSIDE 102 × 86-1/8 C1CURB70C-1 11F58

Prefix	Brand	Generation	Curb on file (tons → OUTSIDE L × W, part)
LHX	Lennox	Xion / smaller packages	3-6 T → OUTSIDE 79-3/4 × 41-1/2 C1CURB70A-1 7.5-10 T → OUTSIDE 95-3/8 × 54-1/4 C1CURB70B-1 11F54 13-25 T → OUTSIDE 102 × 86-1/8 C1CURB70C-1 11F58
QGA	Lennox	Xion / smaller packages	3-5 T → OUTSIDE 52-7/8 × 44-3/8 Clip curbs 21J17
QCA	Lennox	Xion / smaller packages	3-5 T → OUTSIDE 52-7/8 × 44-3/8 Clip curbs 21J17
QHA	Lennox	Xion / smaller packages	3-5 T → OUTSIDE 52-7/8 × 44-3/8 Clip curbs 21J17
D1CG	York	Older gas/electric	3-6 T → OUTSIDE 73 × 37-1/4 1RC0434 7.5-12.5 T → OUTSIDE 93 × 63-1/4 unknown 15 T → OUTSIDE 115-1/4 × 84 1RC0436 20-25 T → OUTSIDE 126-1/4 × 84 1RC0437
D2CG	York	Older gas/electric	3-6 T → OUTSIDE 73 × 37-1/4 1RC0434 7.5-12.5 T → OUTSIDE 93 × 63-1/4 unknown 15 T → OUTSIDE 115-1/4 × 84 1RC0436 20-25 T → OUTSIDE 126-1/4 × 84 1RC0437
D3CG	York	Older gas/electric	3-6 T → OUTSIDE 73 × 37-1/4 1RC0434 7.5-12.5 T → OUTSIDE 93 × 63-1/4 unknown 15 T → OUTSIDE 115-1/4 × 84 1RC0436 20-25 T → OUTSIDE 126-1/4 × 84 1RC0437
D4CG	York	Older gas/electric	3-6 T → OUTSIDE 73 × 37-1/4 1RC0434 7.5-12.5 T → OUTSIDE 93 × 63-1/4 unknown 15 T → OUTSIDE 115-1/4 × 84 1RC0436 20-25 T → OUTSIDE 126-1/4 × 84 1RC0437
D6CG	York	Older gas/electric	3-6 T → OUTSIDE 73 × 37-1/4 1RC0434 7.5-12.5 T → OUTSIDE 93 × 63-1/4 unknown 15 T → OUTSIDE 115-1/4 × 84 1RC0436 20-25 T → OUTSIDE 126-1/4 × 84 1RC0437
D7CG	York	Older gas/electric	3-6 T → OUTSIDE 73 × 37-1/4 1RC0434 7.5-12.5 T → OUTSIDE 93 × 63-1/4 unknown 15 T → OUTSIDE 115-1/4 × 84 1RC0436 20-25 T → OUTSIDE 126-1/4 × 84 1RC0437
D8CG	York	Older gas/electric	3-6 T → OUTSIDE 73 × 37-1/4 1RC0434 7.5-12.5 T → OUTSIDE 93 × 63-1/4 unknown 15 T → OUTSIDE 115-1/4 × 84 1RC0436 20-25 T → OUTSIDE 126-1/4 × 84 1RC0437
D9CG	York	Older gas/electric	3-6 T → OUTSIDE 73 × 37-1/4 1RC0434 7.5-12.5 T → OUTSIDE 93 × 63-1/4 unknown 15 T → OUTSIDE 115-1/4 × 84 1RC0436 20-25 T → OUTSIDE 126-1/4 × 84 1RC0437
D1CE	York	Other older D-families	3-6 T → OUTSIDE 73 × 37-1/4 1RC0434 7.5-12.5 T → OUTSIDE 93 × 63-1/4 unknown 15 T → OUTSIDE 115-1/4 × 84 1RC0436 20-25 T → OUTSIDE 126-1/4 × 84 1RC0437
D3CE	York	Other older D-families	3-6 T → OUTSIDE 73 × 37-1/4 1RC0434 7.5-12.5 T → OUTSIDE 93 × 63-1/4 unknown 15 T → OUTSIDE 115-1/4 × 84 1RC0436 20-25 T → OUTSIDE 126-1/4 × 84 1RC0437
D4CE	York	Other older D-families	3-6 T → OUTSIDE 73 × 37-1/4 1RC0434 7.5-12.5 T → OUTSIDE 93 × 63-1/4 unknown 15 T → OUTSIDE 115-1/4 × 84 1RC0436 20-25 T → OUTSIDE 126-1/4 × 84 1RC0437

Prefix	Brand	Generation	Curb on file (tons → OUTSIDE L × W, part)
D5CE	York	Other older D-families	3-6 T → OUTSIDE 73 × 37-1/4 1RC0434 7.5-12.5 T → OUTSIDE 93 × 63-1/4 unknown 15 T → OUTSIDE 115-1/4 × 84 1RC0436 20-25 T → OUTSIDE 126-1/4 × 84 1RC0437
D6CE	York	Other older D-families	3-6 T → OUTSIDE 73 × 37-1/4 1RC0434 7.5-12.5 T → OUTSIDE 93 × 63-1/4 unknown 15 T → OUTSIDE 115-1/4 × 84 1RC0436 20-25 T → OUTSIDE 126-1/4 × 84 1RC0437
D1EE	York	Other older D-families	3-6 T → OUTSIDE 73 × 37-1/4 1RC0434 7.5-12.5 T → OUTSIDE 93 × 63-1/4 unknown
D1EG	York	Other older D-families	3-6 T → OUTSIDE 73 × 37-1/4 1RC0434 7.5-12.5 T → OUTSIDE 93 × 63-1/4 unknown
D2HE	York	Other older D-families	3-6 T → OUTSIDE 73 × 37-1/4 1RC0434 7.5-12.5 T → OUTSIDE 93 × 63-1/4 unknown
D2HG	York	Other older D-families	3-6 T → OUTSIDE 73 × 37-1/4 1RC0434 7.5-12.5 T → OUTSIDE 93 × 63-1/4 unknown
D3HE	York	Other older D-families	3-6 T → OUTSIDE 73 × 37-1/4 1RC0434 7.5-12.5 T → OUTSIDE 93 × 63-1/4 unknown
D3HG	York	Other older D-families	3-6 T → OUTSIDE 73 × 37-1/4 1RC0434 7.5-12.5 T → OUTSIDE 93 × 63-1/4 unknown
B1CH	York	Older B-families	3-5 T → OUTSIDE 73 × 37-1/4 1RC0434 7.5-12.5 T → OUTSIDE 93 × 63-1/4 unknown 15 T → OUTSIDE 115-1/4 × 84 1RC0436
B2CH	York	Older B-families	3-5 T → OUTSIDE 73 × 37-1/4 1RC0434 7.5-12.5 T → OUTSIDE 93 × 63-1/4 unknown 15 T → OUTSIDE 115-1/4 × 84 1RC0436
B3CH	York	Older B-families	3-5 T → OUTSIDE 73 × 37-1/4 1RC0434 7.5-12.5 T → OUTSIDE 93 × 63-1/4 unknown 15 T → OUTSIDE 115-1/4 × 84 1RC0436
B4CH	York	Older B-families	3-5 T → OUTSIDE 73 × 37-1/4 1RC0434 7.5-12.5 T → OUTSIDE 93 × 63-1/4 unknown 15 T → OUTSIDE 115-1/4 × 84 1RC0436
B5CH	York	Older B-families	3-5 T → OUTSIDE 73 × 37-1/4 1RC0434 7.5-12.5 T → OUTSIDE 93 × 63-1/4 unknown 15 T → OUTSIDE 115-1/4 × 84 1RC0436
B6CH	York	Older B-families	3-5 T → OUTSIDE 73 × 37-1/4 1RC0434 7.5-12.5 T → OUTSIDE 93 × 63-1/4 unknown 15 T → OUTSIDE 115-1/4 × 84 1RC0436
B7CH	York	Older B-families	3-5 T → OUTSIDE 73 × 37-1/4 1RC0434 7.5-12.5 T → OUTSIDE 93 × 63-1/4 unknown 15 T → OUTSIDE 115-1/4 × 84 1RC0436
B1DF	York	Older B-families	3-5 T → OUTSIDE 73 × 37-1/4 1RC0434
B1HN	York	Older B-families	7.5-12.5 T → OUTSIDE 93 × 63-1/4 unknown
DF	York	Sunline / Predator era	3-6 T → OUTSIDE 73 × 37-1/4 1RC0434 6.5-10 T → OUTSIDE 80-5/8 × 50-1/2 1RC0470
DH	York	Sunline / Predator era	3-5 T → OUTSIDE 73 × 37-1/4 1RC0434 6.5-12.5 T → OUTSIDE 80-5/8 × 50-1/2 1RC0470 15 T → OUTSIDE 115-1/4 × 84 1RC0436 17.5-25 T → OUTSIDE 126-1/4 × 84 1RC0437
DJ	York	Sunline / Predator era	3-5 T → OUTSIDE 73 × 37-1/4 1RC0434 12.5 T → OUTSIDE 80-5/8 × 50-1/2 1RC0470 15-25 T → OUTSIDE 126-1/4 × 84 1RC0437

Prefix	Brand	Generation	Curb on file (tons → OUTSIDE L × W, part)
DM	York	Sunline / Predator era	3-6 T → OUTSIDE 73 × 37-1/4 1RC0434 6.5-12.5 T → OUTSIDE 80-5/8 × 50-1/2 1RC0470 15 T → OUTSIDE 115-1/4 × 84 1RC0436 17.5-25 T → OUTSIDE 126-1/4 × 84 1RC0437
DR	York	Sunline / Predator era	3-6 T → OUTSIDE 73 × 37-1/4 1RC0434 7.5-12.5 T → OUTSIDE 80-5/8 × 50-1/2 1RC0470 15-25 T → OUTSIDE 126-1/4 × 84 1RC0437
DY	York	Sunline / Predator era	3-5 T → OUTSIDE 73 × 37-1/4 1RC0434
BP	York	Sunline / Predator era	3-6 T → OUTSIDE 73 × 37-1/4 1RC0434 6.5-12.5 T → OUTSIDE 80-5/8 × 50-1/2 1RC0470 15 T → OUTSIDE 115-1/4 × 84 1RC0436 20 T → OUTSIDE 126-1/4 × 84 1RC0437
BQ	York	Sunline / Predator era	3-5 T → OUTSIDE 73 × 37-1/4 1RC0434 20 T → OUTSIDE 126-1/4 × 84 1RC0437
ZE	York	Later Sunline / Sun Pro	3-6 T → OUTSIDE 73 × 37-1/4 1RC0434
ZF	York	Later Sunline / Sun Pro	6.5-12.5 T → OUTSIDE 80-5/8 × 50-1/2 1RC0470 15 T → OUTSIDE 115-1/4 × 84 1RC0436 17.5-25 T → OUTSIDE 126-1/4 × 84 1RC0437
ZH	York	Later Sunline / Sun Pro	3-12.5 T → OUTSIDE 80-5/8 × 50-1/2 1RC0470
ZJ	York	Later Sunline / Sun Pro	3-12.5 T → OUTSIDE 80-5/8 × 50-1/2 1RC0470 15-25 T → OUTSIDE 126-1/4 × 84 1RC0437
ZR	York	Later Sunline / Sun Pro	3-12.5 T → OUTSIDE 80-5/8 × 50-1/2 1RC0470 15-25 T → OUTSIDE 126-1/4 × 84 1RC0437
ZT	York	Later Sunline / Sun Pro	3-12.5 T → OUTSIDE 80-5/8 × 50-1/2 1RC0470
ZB	York	Later Sunline / Sun Pro	6.5-12.5 T → OUTSIDE 80-5/8 × 50-1/2 1RC0470
XP	York	Later Sunline / Sun Pro	6.5-12.5 T → OUTSIDE 80-5/8 × 50-1/2 1RC0470 15-20 T → OUTSIDE 126-1/4 × 84 1RC0437
XN	York	Later Sunline / Sun Pro	3-6 T → OUTSIDE 73 × 37-1/4 1RC0434
ZQ	York	Sun Core	3-5 T → OUTSIDE 70-7/8 × 40-11/16 1RC0456
ZX	York	Sun Core	3-6 T → OUTSIDE 70-7/8 × 40-11/16 1RC0456 7.5-12.5 T → OUTSIDE 81-3/4 × 53-1/2 1RC0457
ZY	York	Sun Core	3-5 T → OUTSIDE 70-7/8 × 40-11/16 1RC0456 6-10 T → OUTSIDE 81-3/4 × 53-1/2 1RC0457
ZL	York	Sun Core	3-5 T → OUTSIDE 70-7/8 × 40-11/16 1RC0456 7.5-12.5 T → OUTSIDE 81-3/4 × 53-1/2 1RC0457
ZQG	York	Sun Core	3-5 T → OUTSIDE 70-7/8 × 40-11/16 1RC0456
ZQE	York	Sun Core	3-5 T → OUTSIDE 70-7/8 × 40-11/16 1RC0456
ZXG	York	Sun Core	3-6 T → OUTSIDE 70-7/8 × 40-11/16 1RC0456 7.5-12.5 T → OUTSIDE 81-3/4 × 53-1/2 1RC0457
ZXE	York	Sun Core	3-6 T → OUTSIDE 70-7/8 × 40-11/16 1RC0456 7.5-12.5 T → OUTSIDE 81-3/4 × 53-1/2 1RC0457
ZYG	York	Sun Core	3-5 T → OUTSIDE 70-7/8 × 40-11/16 1RC0456 6-10 T → OUTSIDE 81-3/4 × 53-1/2 1RC0457
ZYE	York	Sun Core	3-5 T → OUTSIDE 70-7/8 × 40-11/16 1RC0456 6-10 T → OUTSIDE 81-3/4 × 53-1/2 1RC0457
XQ	York	Sun Core	3-5 T → OUTSIDE 70-7/8 × 40-11/16 1RC0456
XX	York	Sun Core	6 T → OUTSIDE 70-7/8 × 40-11/16 1RC0456 7.5-10 T → OUTSIDE 81-3/4 × 53-1/2 1RC0457
XY	York	Sun Core	3-5 T → OUTSIDE 70-7/8 × 40-11/16 1RC0456 6-8.5 T → OUTSIDE 81-3/4 × 53-1/2 1RC0457

Prefix	Brand	Generation	Curb on file (tons → OUTSIDE L × W, part)
AV	York	Choice	15-17.5 T → OUTSIDE 121-5/8 × 80-5/8 1RC0443 20-25 T → OUTSIDE 135-5/8 × 80-5/8 1RC0444 27.5 T → OUTSIDE 152 × 80-5/8 1RC0445
AW	York	Choice	sizes 13-15 T → OUTSIDE 135-5/8 × 80-5/8 1RC0444 sizes 18-23 T → OUTSIDE 152 × 80-5/8 1RC0445
AD	York	Choice	15-17.5 T → OUTSIDE 121-5/8 × 80-5/8 1RC0443 20-25 T → OUTSIDE 135-5/8 × 80-5/8 1RC0444 27.5 T → OUTSIDE 152 × 80-5/8 1RC0445
AE	York	Choice	sizes 13-15 T → OUTSIDE 135-5/8 × 80-5/8 1RC0444 sizes 18-23 T → OUTSIDE 152 × 80-5/8 1RC0445
AH	York	Choice	15 (size 15) T → OUTSIDE 121-5/8 × 80-5/8 1RC0443 17.5-20 (sizes 18-20) T → OUTSIDE 135-5/8 × 80-5/8 1RC0444 25 (size 25) T → OUTSIDE 152 × 80-5/8 1RC0445
AL	York	Choice	15 (size 15) T → OUTSIDE 121-5/8 × 80-5/8 1RC0443 17.5-20 (sizes 18-20) T → OUTSIDE 135-5/8 × 80-5/8 1RC0444 25 (size 25) T → OUTSIDE 152 × 80-5/8 1RC0445
DG	York (Coleman/Luxaire)	Coleman / Luxaire	3-6 T → OUTSIDE 73 × 37-1/4 1RC0434
DK	York (Coleman/Luxaire)	Coleman / Luxaire	3-6 T → OUTSIDE 73 × 37-1/4 1RC0434
DL	York (Coleman/Luxaire)	Coleman / Luxaire	3-6 T → OUTSIDE 73 × 37-1/4 1RC0434
DS	York (Coleman/Luxaire)	Coleman / Luxaire	3-6 T → OUTSIDE 73 × 37-1/4 1RC0434
DU	York (Coleman/Luxaire)	Coleman / Luxaire	3-6 T → OUTSIDE 73 × 37-1/4 1RC0434
DW	York (Coleman/Luxaire)	Coleman / Luxaire	3-6 T → OUTSIDE 73 × 37-1/4 1RC0434
ZS	York (Coleman/Luxaire)	Coleman / Luxaire	3-6 T → OUTSIDE 73 × 37-1/4 1RC0434 6.5-12.5 T → OUTSIDE 80-5/8 × 50-1/2 1RC0470
ZU	York (Coleman/Luxaire)	Coleman / Luxaire	3-12.5 T → OUTSIDE 80-5/8 × 50-1/2 1RC0470
ZW	York (Coleman/Luxaire)	Coleman / Luxaire	3-12.5 T → OUTSIDE 80-5/8 × 50-1/2 1RC0470
ZV	York (Coleman/Luxaire)	Coleman / Luxaire	3-12.5 (ZV-A3 to ZV-12 UHE) T → OUTSIDE 80-5/8 × 50-1/2 1RC0470
ZK	York (Coleman/Luxaire)	Coleman / Luxaire	3-5 T → OUTSIDE 73 × 37-1/4 1RC0434 3-12.5 T → OUTSIDE 80-5/8 × 50-1/2 1RC0470
BA	York (Coleman/Luxaire)	Coleman / Luxaire	3-6 T → OUTSIDE 73 × 37-1/4 1RC0434 6.5-12.5 T → OUTSIDE 80-5/8 × 50-1/2 1RC0470 15 T → OUTSIDE 115-1/4 × 84 1RC0436
BB	York (Coleman/Luxaire)	Coleman / Luxaire	3-5 T → OUTSIDE 73 × 37-1/4 1RC0434 20 T → OUTSIDE 126-1/4 × 84 1RC0437
XA	York (Coleman/Luxaire)	Coleman / Luxaire	3-5 T → OUTSIDE 73 × 37-1/4 1RC0434
WK	York (Coleman/Luxaire)	Coleman / Luxaire	15-25 T → OUTSIDE 126-1/4 × 84 1RC0437
WW	York (Coleman/Luxaire)	Coleman / Luxaire	15 T → OUTSIDE 115-1/4 × 84 1RC0436 20-25 T → OUTSIDE 126-1/4 × 84 1RC0437
DCG	Daikin	Earlier commercial	3-6 T → OUTSIDE 70-3/4 × 40-1/4 14CURB3672B - Goodman CPC/CPG/CPH & Daikin DCC/DCG 3-6T full-perimeter curb 7.5-12.5 T → OUTSIDE 92-1/4 × 53-1/4 14CURB90150 - Daikin DCC/DCG & Goodman CPC/CPG 090-150 full-perimeter curb 15-25 T → OUTSIDE 123 × 78 14CURB180300
DCC	Daikin	Earlier commercial	3-6 T → OUTSIDE 70-3/4 × 40-1/4 14CURB3672B - Goodman CPC/CPG/CPH & Daikin DCC/DCG 3-6T full-perimeter curb 7.5-12.5 T → OUTSIDE 92-1/4 × 53-1/4 14CURB90150 - Daikin DCC/DCG & Goodman CPC/CPG 090-150 full-perimeter curb 15-25 T → OUTSIDE 123 × 78 14CURB180300

Prefix	Brand	Generation	Curb on file (tons → OUTSIDE L × W, part)
DCH	Daikin	Earlier commercial	3-6 T → OUTSIDE 70-3/4 × 40-1/4 14CURB3672B - Goodman CPC/CPG/CPH & Daikin DCC/DCG 3-6T full-perimeter curb 7.5-12.5 T → OUTSIDE 92-1/4 × 53-1/4 14CURB90150 - Daikin DCC/DCG & Goodman CPC/CPG 090-150 full-perimeter curb
DFG	Daikin	R-410A standard	3-6 T → OUTSIDE 70-5/8 × 42-1/2 0270L02688MC 7.5-12.5 T → OUTSIDE 88-1/16 × 54-9/16 0270L02690MC 15-25 T → OUTSIDE 123 × 78 14CURB180300
DFC	Daikin	R-410A standard	3-6 T → OUTSIDE 70-5/8 × 42-1/2 0270L02688MC 7.5-12.5 T → OUTSIDE 88-1/16 × 54-9/16 0270L02690MC 15-25 T → OUTSIDE 123 × 78 14CURB180300
DFH	Daikin	R-410A standard	3-6 T → OUTSIDE 70-5/8 × 42-1/2 0270L02688MC 7.5-12.5 T → OUTSIDE 88-1/16 × 54-9/16 0270L02690MC
DRG	Daikin	R-410A high efficiency	3-6 T → OUTSIDE 70-5/8 × 42-1/2 0270L02688MC 7.5-12.5 T → OUTSIDE 88-1/16 × 54-9/16 0270L02690MC
DRC	Daikin	R-410A high efficiency	3-6 T → OUTSIDE 70-5/8 × 42-1/2 0270L02688MC 7.5-12.5 T → OUTSIDE 88-1/16 × 54-9/16 0270L02690MC
DRH	Daikin	R-410A high efficiency	3-6 T → OUTSIDE 70-5/8 × 42-1/2 0270L02688MC
DSG	Daikin	R-32 NEXIO Pro	3-6 T → OUTSIDE 70-5/8 × 42-1/2 0270L02688MC 7.5-12.5 T → OUTSIDE 88-1/16 × 54-9/16 0270L02690MC 15-25 T → OUTSIDE 123 × 78 14CURB180300
DSC	Daikin	R-32 NEXIO Pro	3-6 T → OUTSIDE 70-5/8 × 42-1/2 0270L02688MC 7.5-12.5 T → OUTSIDE 88-1/16 × 54-9/16 0270L02690MC 15-25 T → OUTSIDE 123 × 78 14CURB180300
DSH	Daikin	R-32 NEXIO Pro	3-6 T → OUTSIDE 70-5/8 × 42-1/2 0270L02688MC 7.5-12.5 T → OUTSIDE 88-1/16 × 54-9/16 0270L02690MC
DHG	Daikin	R-32 NEXIO Plus	3-6 T → OUTSIDE 70-5/8 × 42-1/2 0270L02688MC 7.5-12.5 T → OUTSIDE 88-1/16 × 54-9/16 0270L02690MC
DHC	Daikin	R-32 NEXIO Plus	3-6 T → OUTSIDE 70-5/8 × 42-1/2 0270L02688MC 7.5-12.5 T → OUTSIDE 88-1/16 × 54-9/16 0270L02690MC
DHH	Daikin	R-32 NEXIO Plus	3-6 T → OUTSIDE 70-5/8 × 42-1/2 0270L02688MC
PG	Goodman/Janitrol	Older gas/electric	3 T → OUTSIDE 49-5/8 × 42 PGC-2 3.5-5 T → OUTSIDE 56-3/4 × 53-3/4 PGC-3
PGB	Goodman/Janitrol	Older gas/electric	3 T → OUTSIDE 49-5/8 × 37 PGC-1 3 T → OUTSIDE 49-5/8 × 42 PGC-2 3.5 T → OUTSIDE 49-5/8 × 42 PGC-2 3.5 T → OUTSIDE 56-3/4 × 53-3/4 PGC-3 4-5 T → OUTSIDE 56-3/4 × 53-3/4 PGC-3 7.5-15 T → OUTSIDE 67-3/4 × 67-3/4 PGC-5
PGJ	Goodman/Janitrol	Older gas/electric	3-4 T → OUTSIDE 56-3/4 × 53-3/4 PGC-3
PC	Goodman/Janitrol	Older cooling / heat pump	2-3.5 T → OUTSIDE 47-1/4 × 31-3/4 S1-1RC0501 3.5-5 T → OUTSIDE 47-1/8 × 41-5/8 S1-1RC0503
PCK	Goodman/Janitrol	Older cooling / heat pump	2-3 T → OUTSIDE 46 × 44-3/4 PCCP-1 3.5-5 T → OUTSIDE 54 × 51-1/2 PCCP2-3
PCJ	Goodman/Janitrol	Older cooling / heat pump	2-3 T T → OUTSIDE 46 × 44-3/4 PCCP-1 2-5 T T → OUTSIDE 54 × 51-1/2 PCCP2-3
PCKJ	Goodman/Janitrol	Older cooling / heat pump	2-2.5 T → OUTSIDE 46 × 44-3/4 PCCP-1 3-5 T → OUTSIDE 54 × 51-1/2 PCCP2-3
PH	Goodman/Janitrol	Older cooling / heat pump	2-3.5 T → OUTSIDE 47-1/4 × 31-3/4 S1-1RC0501 3.5-5 T → OUTSIDE 47-1/8 × 41-5/8 S1-1RC0503
PHK	Goodman/Janitrol	Older cooling / heat pump	2-2.5 T → OUTSIDE 46 × 44-3/4 PCCP-1 3-5 T → OUTSIDE 54 × 51-1/2 PCCP2-3

Prefix	Brand	Generation	Curb on file (tons → OUTSIDE L × W, part)
PHKJ	Goodman/Janitrol	Older cooling / heat pump	2-5 T → OUTSIDE 54 × 51-1/2 PCCP2-3
CPG	Goodman/Janitrol	Commercial packages	3-6 T → OUTSIDE 70-3/4 × 40-1/4 14CURB3672B - Goodman CPC/CPG/CPH & Daikin DCC/DCG 3-6T full-perimeter curb 7.5-12.5 T → OUTSIDE 92-1/4 × 53-1/4 14CURB90150 - Daikin DCC/DCG & Goodman CPC/CPG 090-150 full-perimeter curb 15-20 T → OUTSIDE 123 × 78 14CURB180300
CPC	Goodman/Janitrol	Commercial packages	3-6 T → OUTSIDE 70-3/4 × 40-1/4 14CURB3672B - Goodman CPC/CPG/CPH & Daikin DCC/DCG 3-6T full-perimeter curb 7.5-12.5 T → OUTSIDE 92-1/4 × 53-1/4 14CURB90150 - Daikin DCC/DCG & Goodman CPC/CPG 090-150 full-perimeter curb 15-20 T → OUTSIDE 123 × 78 14CURB180300
CPH	Goodman/Janitrol	Commercial packages	3-5 T → OUTSIDE 70-3/4 × 40-1/4 14CURB3672B - Goodman CPC/CPG/CPH & Daikin DCC/DCG 3-6T full-perimeter curb 7.5-12.5 T → OUTSIDE 92-1/4 × 53-1/4 14CURB90150 - Daikin DCC/DCG & Goodman CPC/CPG 090-150 full-perimeter curb
GPG	Goodman/Janitrol	Smaller packaged families	3-5 T → OUTSIDE 49-1/2 × 42-5/8 D14CRBPGCHMA
PGA	Amana	Older gas/electric	3-5 T → OUTSIDE 47 × 35 PRC08A1
PGB	Amana	Older gas/electric	3 T → OUTSIDE 49-5/8 × 37 PGC-1 3 T → OUTSIDE 49-5/8 × 42 PGC-2 3.5 T → OUTSIDE 49-5/8 × 42 PGC-2 3.5 T → OUTSIDE 56-3/4 × 53-3/4 PGC-3 4-5 T → OUTSIDE 56-3/4 × 53-3/4 PGC-3 7.5-15 T → OUTSIDE 67-3/4 × 67-3/4 PGC-5
PGD	Amana	Older gas/electric	2-5 (small basepan ~2-3.5; check unit) T → OUTSIDE 46-1/8 × 30-5/8 CPRFCURB011B00 3.5-5 (large basepan; check unit) T → OUTSIDE 46-1/8 × 42-3/16 CPRFCURB013B00
PCA	Amana	Cooling / heat pump	3-5 T → OUTSIDE 42-3/8 × 35 PRC06A1
PCC	Amana	Cooling / heat pump	7.5-15 T → OUTSIDE 67-3/4 × 67-3/4 PGC-5
PHB	Amana	Cooling / heat pump	3 T → OUTSIDE 49-5/8 × 42 PGC-2 3.5-5 T → OUTSIDE 56-3/4 × 53-3/4 PGC-3
PHD	Amana	Cooling / heat pump	3-5 T → OUTSIDE 42-3/8 × 35 PRC06A1 3-5 T → OUTSIDE 47 × 35 PRC08A1
APG	Amana	Later gas/electric	3-5 T → OUTSIDE 49-1/2 × 42-5/8 D14CRBPGCHMA
RKKA	Rheem/Ruud	Older Rheem gas/electric	3-6 T → OUTSIDE 70-7/8 × 42-9/16 RXKG-BAD14 3-6 T → OUTSIDE 71 × 42-5/8 RXKG series 3-7.5 T → OUTSIDE 71 × 42-5/8 RXKG-AAB08 7-7.5 T → OUTSIDE 77 × 42-1/2 7-7.5 T T curb
RKMA	Rheem/Ruud	Older Rheem gas/electric	3-6 T → OUTSIDE 70-7/8 × 42-9/16 RXKG-BAD14 3-6 T → OUTSIDE 71 × 42-5/8 RXKG series
RKNA	Rheem/Ruud	Older Rheem gas/electric	3-5 T → OUTSIDE 70-7/8 × 42-9/16 RXKG-BAD14 3-5 T → OUTSIDE 71 × 42-5/8 RXKG series
RKKB	Rheem/Ruud	Older Rheem gas/electric	7.5-12.5 T → OUTSIDE 88-9/16 × 53-1/2 RXKG-BAE14 15-25 T → OUTSIDE 140-15/16 × 53-3/8 RXKG-CAF14
RKMB	Rheem/Ruud	Older Rheem gas/electric	7.5-12.5 T → OUTSIDE 88-9/16 × 53-1/2 RXKG-BAE14 15-25 T → OUTSIDE 140-15/16 × 53-3/8 RXKG-CAF14
RKNB	Rheem/Ruud	Older Rheem gas/electric	7.5-12.5 T → OUTSIDE 88-9/16 × 53-1/2 RXKG-BAE14 15-25 T → OUTSIDE 140-15/16 × 53-3/8 RXKG-CAF14
RLKA	Rheem/Ruud	Older Rheem cooling / HP	3-6 T → OUTSIDE 71 × 42-5/8 RXKG-CAD14 3-6 T → OUTSIDE 71 × 42-5/8 RXKG series 7-7.5 T → OUTSIDE 77 × 42-1/2 7-7.5 T T curb
RLMA	Rheem/Ruud	Older Rheem cooling / HP	6 T → OUTSIDE 71 × 42-5/8 RXKG-CAD14 6 T → OUTSIDE 71 × 42-5/8 RXKG series 7-7.5 T → OUTSIDE 77 × 42-1/2 7-7.5 T T curb

Prefix	Brand	Generation	Curb on file (tons → OUTSIDE L × W, part)
RLNA	Rheem/Ruud	Older Rheem cooling / HP	3-5 T → OUTSIDE 71 × 42-5/8 RXKG series 3-5 T → OUTSIDE 71 × 42-5/8 RXKG-CAD14
RLKB	Rheem/Ruud	Older Rheem cooling / HP	7.5-15 T → OUTSIDE 88-9/16 × 53-3/8 RXKG-CAE14 7.5-15 T → OUTSIDE 88-9/16 × 53-1/2 RXKG-BAE14 17.5-25 T → OUTSIDE 140-15/16 × 53-3/8 RXKG-CAF14
RLMB	Rheem/Ruud	Older Rheem cooling / HP	7.5-12.5 T → OUTSIDE 88-9/16 × 53-3/8 RXKG-CAE14 7.5-12.5 T → OUTSIDE 88-9/16 × 53-1/2 RXKG-BAE14 15-25 T → OUTSIDE 140-15/16 × 53-3/8 RXKG-CAF14
RLNB	Rheem/Ruud	Older Rheem cooling / HP	7.5-10 T → OUTSIDE 88-9/16 × 53-3/8 RXKG-CAE14 7.5-10 T → OUTSIDE 88-9/16 × 53-1/2 RXKG-BAE14 15-25 T → OUTSIDE 140-15/16 × 53-3/8 RXKG-CAF14
RJKA	Rheem/Ruud	Older Rheem cooling / HP	3-5 T → OUTSIDE 70-7/8 × 42-9/16 RXKG-BAD14 3-5 T → OUTSIDE 71 × 42-5/8 RXKG series 7-7.5 T → OUTSIDE 77 × 42-1/2 7-7.5 T T curb
RJMA	Rheem/Ruud	Older Rheem cooling / HP	3-5 T → OUTSIDE 70-7/8 × 42-9/16 RXKG-BAD14 3-5 T → OUTSIDE 71 × 42-5/8 RXKG series
RJNA	Rheem/Ruud	Older Rheem cooling / HP	3-5 T → OUTSIDE 71 × 42-5/8 RXKG-CAD14 3-5 T → OUTSIDE 71 × 42-5/8 RXKG series
RKKL	Rheem/Ruud	Later gas/electric	6 T → OUTSIDE 71 × 42-5/8 RXKG-CAD14 7.5-12.5 T → OUTSIDE 88-9/16 × 53-3/8 RXKG-CAE14
RKNL	Rheem/Ruud	Later gas/electric	3-5 T → OUTSIDE 71 × 42-5/8 RXKG-CAD14 6-12.5 T → OUTSIDE 88-9/16 × 53-3/8 RXKG-CAE14 15-25 T → OUTSIDE 120 × 80-1/2 RXKG-CBH14
RKPL	Rheem/Ruud	Later gas/electric	3-5 T → OUTSIDE 71 × 42-5/8 RXKG-CAD14
RKRL	Rheem/Ruud	Later gas/electric	7.5-10 T → OUTSIDE 88-9/16 × 53-3/8 RXKG-CAE14 15-20 T → OUTSIDE 120 × 80-1/2 RXKG-CBH14
RKKN	Rheem/Ruud	Later gas/electric	6 T → OUTSIDE 71 × 42-5/8 RXKG-CAD14
RKNN	Rheem/Ruud	Later gas/electric	3-5 T → OUTSIDE 71 × 42-5/8 RXKG-CAD14
RKPN	Rheem/Ruud	Later gas/electric	3-5 T → OUTSIDE 71 × 42-5/8 RXKG-CAD14
RKQN	Rheem/Ruud	Later gas/electric	3-5 T → OUTSIDE 71 × 42-5/8 RXKG-CAD14
RLKL	Rheem/Ruud	Later cooling / heat pump	6 T → OUTSIDE 71 × 42-5/8 RXKG-CAD14 7.5-12.5 T → OUTSIDE 88-9/16 × 53-3/8 RXKG-CAE14 15-20 T → OUTSIDE 120 × 80-1/2 RXKG-CBH14
RLNL	Rheem/Ruud	Later cooling / heat pump	3-5 T → OUTSIDE 71 × 42-5/8 RXKG-CAD14 7.5-12.5 T → OUTSIDE 88-9/16 × 53-3/8 RXKG-CAE14 15-25 T → OUTSIDE 120 × 80-1/2 RXKG-CBH14
RLPL	Rheem/Ruud	Later cooling / heat pump	3-5 T → OUTSIDE 71 × 42-5/8 RXKG-CAD14
RLRL	Rheem/Ruud	Later cooling / heat pump	15-20 T → OUTSIDE 120 × 80-1/2 RXKG-CBH14 7.5-10 T → OUTSIDE 88-9/16 × 53-3/8 RXKG-CAE14
RLKN	Rheem/Ruud	Later cooling / heat pump	6 T → OUTSIDE 71 × 42-5/8 RXKG-CAD14
RLNN	Rheem/Ruud	Later cooling / heat pump	3-5 T → OUTSIDE 71 × 42-5/8 RXKG-CAD14
RLPN	Rheem/Ruud	Later cooling / heat pump	3-5 T → OUTSIDE 71 × 42-5/8 RXKG-CAD14
RLQN	Rheem/Ruud	Later cooling / heat pump	3-5 T → OUTSIDE 71 × 42-5/8 RXKG-CAD14
RJNL	Rheem/Ruud	Later cooling / heat pump	3-6 T → OUTSIDE 71 × 42-5/8 RXKG-CAD14 7.5-10 T → OUTSIDE 88-9/16 × 53-3/8 RXKG-CAE14
RJPL	Rheem/Ruud	Later cooling / heat pump	3-5 T → OUTSIDE 71 × 42-5/8 RXKG-CAD14
RGEC	Rheem/Ruud	Renaissance / small packages	3-6 T → OUTSIDE 74-7/8 × 40-11/16 RXKG-DCC14
RGED	Rheem/Ruud	Renaissance / small packages	7.5-12.5 T → OUTSIDE 85-3/8 × 53-1/2 RXKG-DDD14
RGEG	Rheem/Ruud	Renaissance / small packages	15-25 T → OUTSIDE 123-9/16 × 81-3/4 RXRX-DGC14

Prefix	Brand	Generation	Curb on file (tons → OUTSIDE L × W, part)
RACC	Rheem/Ruud	Renaissance / small packages	3-6 T → OUTSIDE 74-7/8 × 40-11/16 RXKG-DCC14
RACD	Rheem/Ruud	Renaissance / small packages	7.5-12.5 T → OUTSIDE 85-3/8 × 53-1/2 RXKG-DDD14
RACG	Rheem/Ruud	Renaissance / small packages	15-25 T → OUTSIDE 123-9/16 × 81-3/4 RXRX-DGC14
RHPC	Rheem/Ruud	Renaissance / small packages	3-5 T → OUTSIDE 74-7/8 × 40-11/16 RXKG-DCC14
RHPD	Rheem/Ruud	Renaissance / small packages	7.5-10 T → OUTSIDE 85-3/8 × 53-1/2 RXKG-DDD14
RGEA	Rheem/Ruud	Renaissance / small packages	3-5 T → OUTSIDE 49 × 44-5/8 RXSG-AAA08
RACA	Rheem/Ruud	Renaissance / small packages	3-5 T → OUTSIDE 49 × 44-5/8 RXSG-AAA08
RQPL	Rheem/Ruud	Renaissance / small packages	2-5 T → OUTSIDE 49 × 44-5/8 RXQG-AAA08
UKKA	Rheem/Ruud	Confirmed older Ruud	3-7.5 T → OUTSIDE 70-7/8 × 42-9/16 RXKG-BAD14 3-7.5 T → OUTSIDE 71 × 42-5/8 RXKG series 3-7.5 T → OUTSIDE 71 × 42-5/8 RXKG-AAB08
UKMA	Rheem/Ruud	Confirmed older Ruud	3-6 T → OUTSIDE 70-7/8 × 42-9/16 RXKG-BAD14 3-6 T → OUTSIDE 71 × 42-5/8 RXKG series
ULKA	Rheem/Ruud	Confirmed older Ruud	3-7.5 T → OUTSIDE 71 × 42-5/8 RXKG-CAD14 3-7.5 T → OUTSIDE 71 × 42-5/8 RXKG series
ULMA	Rheem/Ruud	Confirmed older Ruud	6 T → OUTSIDE 71 × 42-5/8 RXKG-CAD14 6 T → OUTSIDE 71 × 42-5/8 RXKG series
UJKA	Rheem/Ruud	Confirmed older Ruud	3-5 T → OUTSIDE 70-7/8 × 42-9/16 RXKG-BAD14 3-5 T → OUTSIDE 71 × 42-5/8 RXKG series
UJMA	Rheem/Ruud	Confirmed older Ruud	3-5 T → OUTSIDE 70-7/8 × 42-9/16 RXKG-BAD14 3-5 T → OUTSIDE 71 × 42-5/8 RXKG series
URKA	Rheem/Ruud	Confirmed older Ruud	3-5 T → OUTSIDE 49 × 44-5/8 RXSG-AAA08
URMA	Rheem/Ruud	Confirmed older Ruud	3-5 T → OUTSIDE 49 × 44-5/8 RXSG-AAA08
USKA	Rheem/Ruud	Confirmed older Ruud	3-5 T → OUTSIDE 49 × 44-5/8 RXSG-AAA08
USMA	Rheem/Ruud	Confirmed older Ruud	3-4 T → OUTSIDE 49 × 44-5/8 RXSG-AAA08
UQKA	Rheem/Ruud	Confirmed older Ruud	3-4 T → OUTSIDE 46 × 41-9/16 RXQG-AAA14
UQLA	Rheem/Ruud	Confirmed older Ruud	3-4 T → OUTSIDE 46 × 41-9/16 RXQG-AAA14
UQMA	Rheem/Ruud	Confirmed older Ruud	3 T → OUTSIDE 46 × 41-9/16 RXQG-AAA14
PGA	ICP	Older commercial packages	3-3.5 T → OUTSIDE 42-3/4 × 42-3/4 AXB020CLA 4-5 T → OUTSIDE 67-3/4 × 42-3/4 AXB030CLA
PGB	ICP	Older commercial packages	3-5 T → OUTSIDE 67-3/4 × 42-3/4 AXB030CLA 12.5-20 T → OUTSIDE 93-3/8 × 61-1/2 12.5-20 T T curb
PGD	ICP	Older commercial packages	3-5 T → OUTSIDE 46-1/8 × 30-5/8 CPRFCURB011B00 3-5 T → OUTSIDE 46-1/8 × 42-3/16 CPRFCURB013B00 7.5-10 T → OUTSIDE 84-1/8 × 51 7.5-10 T T curb
PAD	ICP	Older commercial packages	3-5 T → OUTSIDE 46-1/8 × 30-5/8 CPRFCURB011B00 3-5 T → OUTSIDE 46-1/8 × 42-3/16 CPRFCURB013B00
PAF	ICP	Older commercial packages	3-5 T → OUTSIDE 45-3/4 × 42-1/2 ACL01FB0A 3-5 T → OUTSIDE 42-3/4 × 42-3/4 AXB020CLA
PGE	ICP	Older commercial packages	6 T → OUTSIDE 62-1/4 × 40-5/16 AXB035CLA 7.5-12.5 T → OUTSIDE 75-9/16 × 53-3/16 AXB045CLA 15-20 T → OUTSIDE 77-3/4 × 75-9/16 AXB060CMA 3-6 T → outside not on file Carrier CRRFCURB001A0x/002A0x and CRRFCURB003A0x/004A0x family - see Carrier rows 3-6 T → OUTSIDE 70-7/8 × 40-11/16 CRRFCURB001A01 7.5-12.5 T → outside not on file Carrier CRRFCURB001A0x/002A0x and CRRFCURB003A0x/004A0x family - see Carrier rows 7.5-12.5 T → OUTSIDE 81-3/4 × 53-1/2 CRRFCURB003A01

Prefix	Brand	Generation	Curb on file (tons → OUTSIDE L × W, part)
PGH	ICP	Older commercial packages	3-6 T → outside not on file Carrier CRRFCURB001A0x/002A0x and CRRFCURB003A0x/004A0x family - see Carrier rows 3-6 T → OUTSIDE 70-7/8 × 40-11/16 CRRFCURB001A01 7.5-12.5 T → outside not on file Carrier CRRFCURB001A0x/002A0x and CRRFCURB003A0x/004A0x family - see Carrier rows 7.5-12.5 T → OUTSIDE 81-3/4 × 53-1/2 CRRFCURB003A01
PAE	ICP	Older commercial packages	6 T → OUTSIDE 62-1/4 × 40-5/16 AXB035CLA 7.5-12.5 T → OUTSIDE 75-9/16 × 53-3/16 AXB045CLA 15-20 T → OUTSIDE 77-3/4 × 75-9/16 AXB060CMA 3-6 T → outside not on file Carrier CRRFCURB001A0x/002A0x and CRRFCURB003A0x/004A0x family - see Carrier rows 3-6 T → OUTSIDE 70-7/8 × 40-11/16 CRRFCURB001A01 7.5-12.5 T → outside not on file Carrier CRRFCURB001A0x/002A0x and CRRFCURB003A0x/004A0x family - see Carrier rows 7.5-12.5 T → OUTSIDE 81-3/4 × 53-1/2 CRRFCURB003A01
PAH	ICP	Older commercial packages	3-6 T → outside not on file Carrier CRRFCURB001A0x/002A0x and CRRFCURB003A0x/004A0x family - see Carrier rows 3-6 T → OUTSIDE 70-7/8 × 40-11/16 CRRFCURB001A01 7.5-12.5 T → outside not on file Carrier CRRFCURB001A0x/002A0x and CRRFCURB003A0x/004A0x family - see Carrier rows 7.5-12.5 T → OUTSIDE 81-3/4 × 53-1/2 CRRFCURB003A01
PHS	ICP	Older commercial packages	3-6 T → outside not on file Carrier CRRFCURB001A0x/002A0x and CRRFCURB003A0x/004A0x family - see Carrier rows 3-6 T → OUTSIDE 70-7/8 × 40-11/16 CRRFCURB001A01 7.5-12.5 T → outside not on file Carrier CRRFCURB001A0x/002A0x and CRRFCURB003A0x/004A0x family - see Carrier rows 7.5-12.5 T → OUTSIDE 81-3/4 × 53-1/2 CRRFCURB003A01
PHH	ICP	Older commercial packages	3-6 T → outside not on file Carrier CRRFCURB001A0x/002A0x and CRRFCURB003A0x/004A0x family - see Carrier rows 3-6 T → OUTSIDE 70-7/8 × 40-11/16 CRRFCURB001A01 7.5-12.5 T → outside not on file Carrier CRRFCURB001A0x/002A0x and CRRFCURB003A0x/004A0x family - see Carrier rows 7.5-12.5 T → OUTSIDE 81-3/4 × 53-1/2 CRRFCURB003A01
RGS	ICP	Standard / high efficiency	3-6 T → OUTSIDE 70-7/8 × 40-11/16 CRRFCURB001A01 7.5-12.5 T → OUTSIDE 81-3/4 × 53-1/2 CRRFCURB003A01 15 T → OUTSIDE 109-1/4 × 57-9/16 CRRFCURB074A00
RAS	ICP	Standard / high efficiency	3-6 T → OUTSIDE 70-7/8 × 40-11/16 CRRFCURB001A01 7.5-12.5 T → OUTSIDE 81-3/4 × 53-1/2 CRRFCURB003A01 15 T → OUTSIDE 109-1/4 × 57-9/16 CRRFCURB074A00
RHS	ICP	Standard / high efficiency	3-6 T → OUTSIDE 70-7/8 × 40-11/16 CRRFCURB001A01 7.5-10 T → OUTSIDE 81-3/4 × 53-1/2 CRRFCURB003A01 15 T → OUTSIDE 121-5/8 × 80-5/8 CRRFCURB045A00 20 T → OUTSIDE 135-11/16 × 80-5/8 CRRFCURB047A00 12.5 T → OUTSIDE 109-1/4 × 57-9/16 CRRFCURB072A00
RGH	ICP	Standard / high efficiency	3-5 T → OUTSIDE 70-7/8 × 40-11/16 CRRFCURB001A01 6-10 T → OUTSIDE 81-3/4 × 53-1/2 CRRFCURB003A01 12.5 T → OUTSIDE 109-1/4 × 57-9/16 CRRFCURB074A00 15 T → OUTSIDE 121-5/8 × 80-5/8 CRRFCURB045A00 17.5-20 T → OUTSIDE 135-11/16 × 80-5/8 CRRFCURB047A00 25 T → OUTSIDE 151-15/16 × 80-5/8 CRRFCURB049A00
RAH	ICP	Standard / high efficiency	3-5 T → OUTSIDE 70-7/8 × 40-11/16 CRRFCURB001A01 6-10 T → OUTSIDE 81-3/4 × 53-1/2 CRRFCURB003A01 12.5 T → OUTSIDE 109-1/4 × 57-9/16 CRRFCURB074A00

Prefix	Brand	Generation	Curb on file (tons → OUTSIDE L × W, part)
RHH	ICP	Standard / high efficiency	3-5 T → OUTSIDE 70-7/8 × 40-11/16 CRRFCURB001A01 6-10 T → OUTSIDE 81-3/4 × 53-1/2 CRRFCURB003A01 12.5 T → OUTSIDE 109-1/4 × 57-9/16 CRRFCURB074A00
RGX	ICP	Additional generations	3-5 T → OUTSIDE 70-7/8 × 40-11/16 CRRFCURB001A01
RAX	ICP	Additional generations	3-5 T → OUTSIDE 70-7/8 × 40-11/16 CRRFCURB001A01
RHX	ICP	Additional generations	3-5 T → OUTSIDE 70-7/8 × 40-11/16 CRRFCURB001A01
RGV	ICP	Additional generations	3-6 T → OUTSIDE 70-7/8 × 40-11/16 CRRFCURB001A01 7.5-12.5 T → OUTSIDE 81-3/4 × 53-1/2 CRRFCURB003A01 17.5 T → OUTSIDE 121-5/8 × 80-5/8 CRRFCURB045A00 20-25 T → OUTSIDE 135-11/16 × 80-5/8 CRRFCURB047A00 27.5 T → OUTSIDE 151-15/16 × 80-5/8 CRRFCURB049A00
RAV	ICP	Additional generations	3-6 T → OUTSIDE 70-7/8 × 40-11/16 CRRFCURB001A01 7.5-12.5 T → OUTSIDE 81-3/4 × 53-1/2 CRRFCURB003A01 17.5 T → OUTSIDE 121-5/8 × 80-5/8 CRRFCURB045A00 20-25 T → OUTSIDE 135-11/16 × 80-5/8 CRRFCURB047A00 27.5 T → OUTSIDE 151-15/16 × 80-5/8 CRRFCURB049A00
RHV	ICP	Additional generations	3-6 T → OUTSIDE 70-7/8 × 40-11/16 CRRFCURB001A01 7.5-12.5 T → OUTSIDE 81-3/4 × 53-1/2 CRRFCURB003A01
RGW	ICP	Additional generations	3-5 T → OUTSIDE 70-7/8 × 40-11/16 CRRFCURB001A01
RAW	ICP	Additional generations	3-5 T → OUTSIDE 70-7/8 × 40-11/16 CRRFCURB001A01
RHW	ICP	Additional generations	3-5 T → OUTSIDE 70-7/8 × 40-11/16 CRRFCURB001A01
RGF	ICP	Additional generations	3-6 T → OUTSIDE 70-7/8 × 40-11/16 CRRFCURB001A01 7.5-12.5 T → OUTSIDE 81-3/4 × 53-1/2 CRRFCURB003A01 17.5 T → OUTSIDE 121-5/8 × 80-5/8 CRRFCURB045A00 20-25 T → OUTSIDE 135-11/16 × 80-5/8 CRRFCURB047A00 27.5 T → OUTSIDE 151-15/16 × 80-5/8 CRRFCURB049A00
RAF	ICP	Additional generations	3-6 T → OUTSIDE 70-7/8 × 40-11/16 CRRFCURB001A01 7.5-12.5 T → OUTSIDE 81-3/4 × 53-1/2 CRRFCURB003A01 17.5 T → OUTSIDE 121-5/8 × 80-5/8 CRRFCURB045A00 20-25 T → OUTSIDE 135-11/16 × 80-5/8 CRRFCURB047A00 27.5 T → OUTSIDE 151-15/16 × 80-5/8 CRRFCURB049A00
RHF	ICP	Additional generations	3-6 T → OUTSIDE 70-7/8 × 40-11/16 CRRFCURB001A01 7.5-12.5 T → OUTSIDE 81-3/4 × 53-1/2 CRRFCURB003A01
RGG	ICP	Additional generations	T → OUTSIDE 80-1/16 × 79-5/16 RXRK-E54
RAG	ICP	Additional generations	3-5 T → OUTSIDE 70-7/8 × 40-11/16 CRRFCURB001A01 6-10 T → OUTSIDE 81-3/4 × 53-1/2 CRRFCURB003A01 12.5 T → OUTSIDE 109-1/4 × 57-9/16 CRRFCURB074A00
RHG	ICP	Additional generations	3-5 T → OUTSIDE 70-7/8 × 40-11/16 CRRFCURB001A01 6-8.5 T → OUTSIDE 81-3/4 × 53-1/2 CRRFCURB003A01
HV	York	Choice	12.5 T → OUTSIDE 121-5/8 × 80-5/8 1RC0443 15-20 T → OUTSIDE 135-5/8 × 80-5/8 1RC0444 25 T → OUTSIDE 152 × 80-5/8 1RC0445
GPC	Goodman/Janitrol	Smaller packaged families	3-5 T → OUTSIDE 49-1/2 × 42-5/8 D14CRBPGCHMA
YSC	American Standard	Precedent gas/electric	3-5 T → OUTSIDE 65-13/16 × 41-7/16 BAYCURB042A 6-10 T → OUTSIDE 84-1/2 × 50-3/8 BAYCURB043A
YHC	American Standard	Precedent gas/electric	3 T → OUTSIDE 65-13/16 × 41-7/16 BAYCURB042A 4-8.5 T → OUTSIDE 84-1/2 × 50-3/8 BAYCURB043A 7.5-10 T → OUTSIDE 84-1/2 × 60-3/8 BAYCURB044A
YSD	American Standard	Voyager gas/electric	12.5 T → OUTSIDE 102-1/4 × 67 BAYCURB026B 15-25 T → OUTSIDE 117-3/16 × 81 BAYCURB027B

Prefix	Brand	Generation	Curb on file (tons → OUTSIDE L × W, part)
YSH	American Standard	Voyager gas/electric	12.5 T → OUTSIDE 102-1/4 × 67 BAYCURB026B 15-25 T → OUTSIDE 117-3/16 × 81 BAYCURB027B
YHD	American Standard	Voyager gas/electric	12.5 T → OUTSIDE 102-1/4 × 67 BAYCURB026B 15-25 T → OUTSIDE 117-3/16 × 81 BAYCURB027B
YHH	American Standard	Voyager gas/electric	12.5 T → OUTSIDE 102-1/4 × 67 BAYCURB026B 15-25 T → OUTSIDE 117-3/16 × 81 BAYCURB027B
GBC	American Standard	Foundation	3-5 T → OUTSIDE 70-7/8 × 42 BAYCURB320* 7.5-12.5 T → OUTSIDE 81-7/8 × 53-5/8 BAYCURB310*
TGA	Allied Commercial	L-Series / T-Series	3-6 T → OUTSIDE 79-3/4 × 41-1/2 T1CURB23AN1 7.5-12.5 T → OUTSIDE 95-3/8 × 54-1/4 LARMF10/15S-14 15-20 T → OUTSIDE 102-1/8 × 86-1/4 LARMF18/36-14
TCA	Allied Commercial	L-Series / T-Series	3-6 T → OUTSIDE 79-3/4 × 41-1/2 T1CURB23AN1 7.5-12.5 T → OUTSIDE 95-3/8 × 54-1/4 LARMF10/15S-14 15-20 T → OUTSIDE 102-1/8 × 86-1/4 LARMF18/36-14
KGA	Allied Commercial	Landmark	3-6 T → OUTSIDE 79-3/4 × 41-1/2 C1CURB70A-1 7.5 T → OUTSIDE 92-3/4 × 41-1/2 K1CURB70AP1 7.5-12.5 T → OUTSIDE 95-3/8 × 54-1/4 C1CURB70B-1 11F54 13-25 T → OUTSIDE 102 × 86-1/8 C1CURB70C-1 11F58
KCA	Allied Commercial	Landmark	3-6 T → OUTSIDE 79-3/4 × 41-1/2 C1CURB70A-1 7.5 T → OUTSIDE 92-3/4 × 41-1/2 K1CURB70AP1 7.5-12.5 T → OUTSIDE 95-3/8 × 54-1/4 C1CURB70B-1 11F54 13-25 T → OUTSIDE 102 × 86-1/8 C1CURB70C-1 11F58
ZGA	Allied Commercial	Raider	3-5 T → OUTSIDE 71 × 42-5/16 Z1CURB70A-1 7.5-12.5 T → OUTSIDE 89-3/8 × 54-1/8 10Z25
ZCA	Allied Commercial	Raider	3-6 T → OUTSIDE 71 × 42-5/16 Z1CURB70A-1 7.5-12.5 T → OUTSIDE 89-3/8 × 54-1/8 10Z25
LGX	Allied Commercial	Xion / smaller packages	3-6 T → OUTSIDE 79-3/4 × 41-1/2 C1CURB70A-1 7.5-12.5 T → OUTSIDE 95-3/8 × 54-1/4 C1CURB70B-1 11F54 13-25 T → OUTSIDE 102 × 86-1/8 C1CURB70C-1 11F58
LCX	Allied Commercial	Xion / smaller packages	3-6 T → OUTSIDE 79-3/4 × 41-1/2 C1CURB70A-1 7.5-12.5 T → OUTSIDE 95-3/8 × 54-1/4 C1CURB70B-1 11F54 13-25 T → OUTSIDE 102 × 86-1/8 C1CURB70C-1 11F58
LHX	Allied Commercial	Xion / smaller packages	3-6 T → OUTSIDE 79-3/4 × 41-1/2 C1CURB70A-1 7.5-10 T → OUTSIDE 95-3/8 × 54-1/4 C1CURB70B-1 11F54 13-25 T → OUTSIDE 102 × 86-1/8 C1CURB70C-1 11F58
QGA	Allied Commercial	Xion / smaller packages	3-5 T → OUTSIDE 52-7/8 × 44-3/8 Clip curbs 21J17
QCA	Allied Commercial	Xion / smaller packages	3-5 T → OUTSIDE 52-7/8 × 44-3/8 Clip curbs 21J17
QHA	Allied Commercial	Xion / smaller packages	3-5 T → OUTSIDE 52-7/8 × 44-3/8 Clip curbs 21J17

SOURCE EXCERPT (left: the cited page of the manufacturer or curb-maker document) beside our TOP VIEW drawing (right, to scale, looking down).
Openings are drawn only where their offsets are documented; offsets run from the OUTSIDE left end and OUTSIDE bottom side. Curb-maker sources are UNVERIFIED.

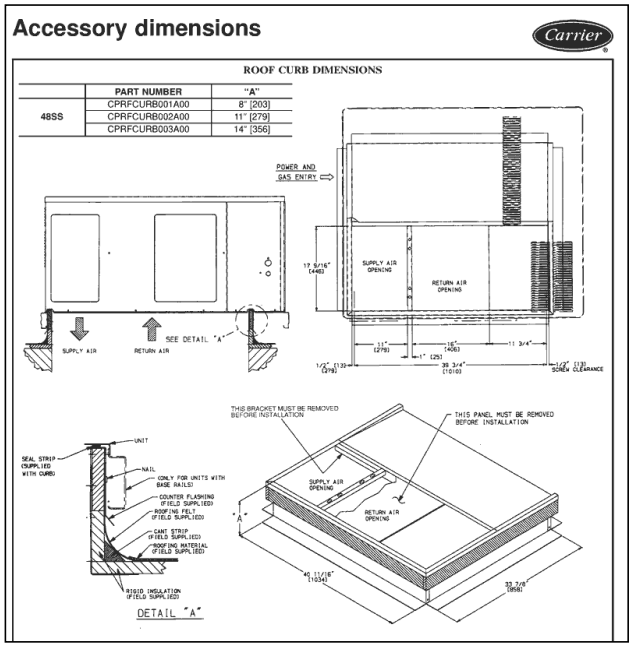

Accessory dimensions

Carrier

ROOF CURB DIMENSIONS

	PART NUMBER	"A"
48SS	CPRFCURB001A00	8" [203]
	CPRFCURB002A00	11" [279]
	CPRFCURB003A00	14" [356]

POWER AND GAS ENTRY

SUPPLY AIR OPENING

RETURN AIR OPENING

SEE DETAIL "A"

SUPPLY AIR

RETURN AIR

THIS BRACKET MUST BE REMOVED BEFORE INSTALLATION

THIS PANEL MUST BE REMOVED BEFORE INSTALLATION

SEAL STRIP (SUPPLIED WITH CURB)

UNIT

NAIL (ONLY FOR UNITS WITH BASE RAILS)

COUNTER FLASHING (FIELD SUPPLIED)

ROOFING FELT (FIELD SUPPLIED)

CANT STRIP (FIELD SUPPLIED)

ROOFING MATERIAL (FIELD SUPPLIED)

RIGID INSULATION (FIELD SUPPLIED)

DETAIL "A"

Manufacturer drawing · page 12 · https://wizard.youngsupply.com/files/5-8963.pdf

TOP VIEW · LOOKING DOWN ON THE CURB · TO SCALE

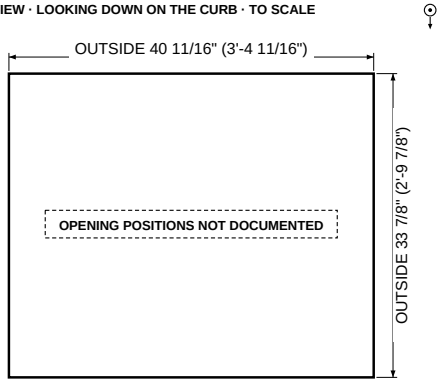

Rail width not documented, so the inside line is not drawn.
Supply opening 11 × 17 9/16": size documented, position not documented (not drawn).
Return opening 16 × 17 9/16": size documented, position not documented (not drawn).
Measure here: OUTSIDE of the curb rail with a tape; unit end not documented.

Carrier/Bryant/ICP — VERIFIED
Part # CPRFCURB001A00 (8 in) / CPRFCURB002A00 (11 in) / CPRFCURB003A00 (14 in)
OUTSIDE 40 11/16 × 33 7/8" · Height 8, 11, 14 in · Tons 1.5-5 T · legacy
Ref: x from the outside of the supply end along the 40-11/16 length: printed 1/2 [13] screw clearance then supply 11, 1 divider, return 16, 11-3/4 panel (= 39-3/4, closes); ret_x derived 0.5+11+1; both openings 17-9/16 across the 33-7/8 width, y offset not printed

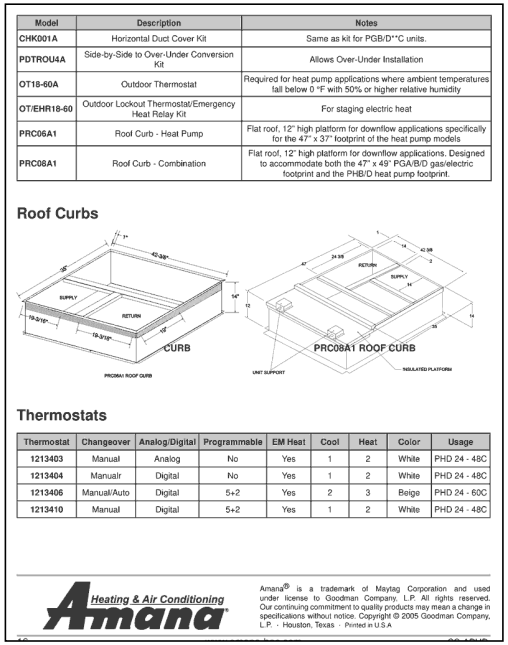

Model	Description	Notes
CHK001A	Horizontal Duct Cover Kit	Same as kit for PGB/D**C units.
PDTROU4A	Side-by-Side to Over-Under Conversion Kit	Allows Over-Under Installation
OT18-60A	Outdoor Thermostat	Required for heat pump applications where ambient temperatures fall below 0 °F with 50% or higher relative humidity
OT/EHR18-60	Outdoor Lockout Thermostat/Emergency Heat Relay Kit	For staging electric heat
PRC06A1	Roof Curb - Heat Pump	Flat roof, 12" high platform for downflow applications specifically for the 47" x 37" footprint of the heat pump models
PRC08A1	Roof Curb - Combination	Flat roof, 12" high platform for downflow applications. Designed to accommodate both the 47" x 49" PGA/B/D gas/electric footprint and the PHB/D heat pump footprint.

Roof Curbs

CURB

PRC08A1 ROOF CURB

Thermostats

Thermostat	Changeover	Analog/Digital	Programmable	EM Heat	Cool	Heat	Color	Usage
1213403	Manual	Analog	No	Yes	1	2	White	PHD 24 - 48C
1213404	Manualr	Digital	No	Yes	1	2	White	PHD 24 - 48C
1213406	Manual/Auto	Digital	5+2	Yes	2	3	Beige	PHD 24 - 60C
1213410	Manual	Digital	5+2	Yes	1	2	White	PHD 24 - 48C

Heating & Air Conditioning Amana

Amana® is a trademark of Maytag Corporation and used under license to Goodman Company, L.P. All rights reserved. Our continuing commitment to quality products may mean a change in specifications without notice. Copyright © 2005 Goodman Company, L.P. - Houston, Texas - Printed in U.S.A

Manufacturer drawing · page 16 · https://mobile.goodmanmfg.com/mobileapp/stellent/pdf/infoPdf/Lit/SS-APHD.pdf

TOP VIEW · LOOKING DOWN ON THE CURB · TO SCALE

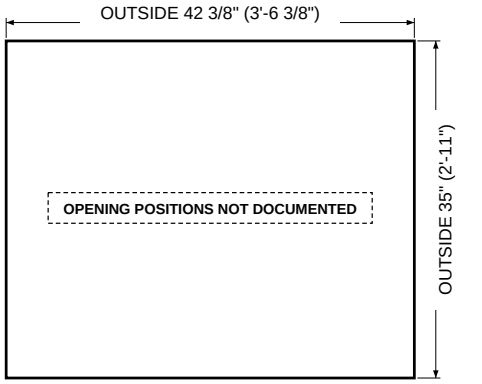

Rail width not documented, so the inside line is not drawn.
Return opening 19 3/16 × 19": size documented, position not documented (not drawn).
Measure here: OUTSIDE of the curb rail with a tape; unit end not documented.

Daikin/Goodman/Amana — UNVERIFIED
Part # PRC06A1 (Amana flat roof curb, heat pump / cooling footprint; older PRC06A)
OUTSIDE 42 3/8 × 35" · Height 14 in · Tons 3-5 T · legacy
Ref: positions not dimensioned; supply and return side by side along the 42-3/8 length

SOURCE EXCERPT (left: the cited page of the manufacturer or curb-maker document) beside our TOP VIEW drawing (right, to scale, looking down).
Openings are drawn only where their offsets are documented; offsets run from the OUTSIDE left end and OUTSIDE bottom side. Curb-maker sources are UNVERIFIED.

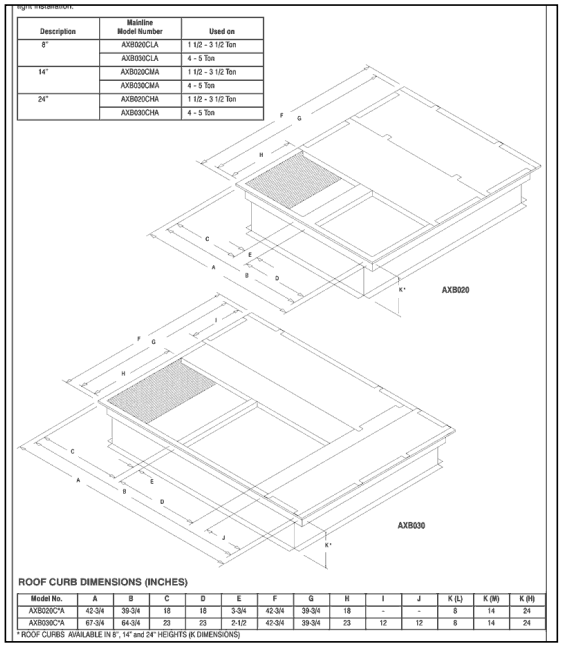

Description	Mainline Model Number	Used on
8"	AXB020CLA	1 1/2 - 3 1/2 Ton
	AXB030CLA	4 - 5 Ton
14"	AXB020CMA	1 1/2 - 3 1/2 Ton
	AXB030CMA	4 - 5 Ton
24"	AXB020CHA	1 1/2 - 3 1/2 Ton
	AXB030CHA	4 - 5 Ton

AXB020

AXB030

ROOF CURB DIMENSIONS (INCHES)

Model No.	A	B	C	D	E	F	G	H	I	J	K (L)	K (M)	K (H)
AXB020C*A	42-3/4	39-3/4	18	18	3-3/4	42-3/4	39-3/4	18	-	-	8	14	24
AXB030C*A	67-3/4	64-3/4	23	23	2-1/2	42-3/4	39-3/4	23	12	12	8	14	24

* ROOF CURBS AVAILABLE IN 8", 14" and 24" HEIGHTS (K DIMENSIONS)

Manufacturer drawing · page 8 · https://www.shareddocs.com/hvac/docs/1011/Public/01/46211100200_ICP_13225.pdf

TOP VIEW · LOOKING DOWN ON THE CURB · TO SCALE

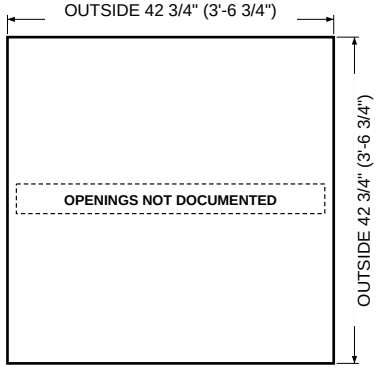

Rail width not documented, so the inside line is not drawn.
Supply opening 18 × 18": size documented, position not documented (not drawn).
Return opening 18 × 18": size documented, position not documented (not drawn).
Measure here: OUTSIDE of the curb rail with a tape; unit end not documented.

Carrier/Bryant/ICP VERIFIED
Part # AXB020CLA (8 in) / AXB020CMA (14 in) / AXB020CHA (24 in)
OUTSIDE 42 3/4 × 42 3/4" · Height 8 / 14 / 24 in · Tons 3-3.5 T · legacy
Ref: sizes only: C and D = 18 in openings with a 3 3/4 in rail between (E), H = 18 in across; which is supply/return and the x/y are not printed

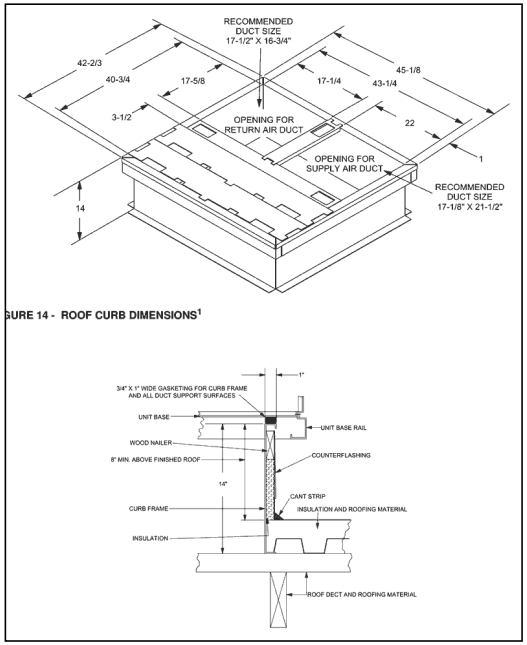

GURE 14 - ROOF CURB DIMENSIONS[1]

Manufacturer drawing · page 29 · http://www.hvactechsupport.com/rooftop/Affinity-DNP-2-5T.pdf

TOP VIEW · LOOKING DOWN ON THE CURB · TO SCALE

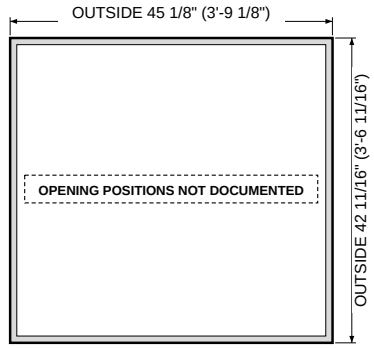

Grey band = curb rail, 15/16" wide. Inner line = INSIDE of rail: 43 1/4 × 40 13/16" (outside minus 2 × rail, calculated).
Supply opening 22 × 17 5/8": size documented, position not documented (not drawn).
Return opening 17 1/4 × 17 5/8": size documented, position not documented (not drawn).
Measure here: OUTSIDE of the curb rail with a tape; unit end not documented.

York/JCI VERIFIED
Part # unknown (York Affinity D*NP roof curb, 14 in; 8 in also available)
OUTSIDE 45 1/8 × 42 11/16" · Height 14 / 8 in · 2-5 T · legacy
Ref: length = 45-1/8 side, width = 42-2/3 side; x from the return-end outside edge. Derived: rail (45.125-43.25)/2 = 0.9375 (drawing prints 1); sup_x = 0.9375+17.25+4 (4 = 43.25-17.25-22, closes). y offset not resolved, omitted.

SOURCE EXCERPT (left: the cited page of the manufacturer or curb-maker document) beside our TOP VIEW drawing (right, to scale, looking down).
Openings are drawn only where their offsets are documented; offsets run from the OUTSIDE left end and OUTSIDE bottom side. Curb-maker sources are UNVERIFIED.

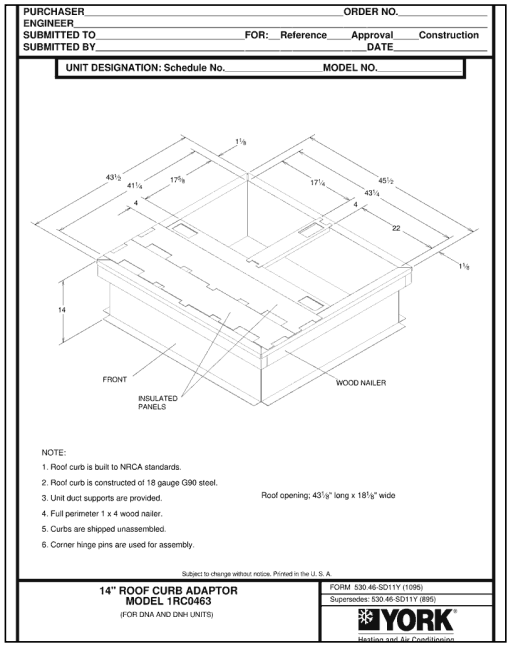

PURCHASER_____ ORDER NO._____
ENGINEER_____
SUBMITTED TO_____ FOR: Reference Approval Construction
SUBMITTED BY_____ DATE_____

UNIT DESIGNATION: Schedule No._____ MODEL NO._____

NOTE:
1. Roof curb is built to NRCA standards.
2. Roof curb is constructed of 18 gauge G90 steel.
3. Unit duct supports are provided.
4. Full perimeter 1 x 4 wood nailer.
5. Curbs are shipped unassembled.
6. Corner hinge pins are used for assembly.

Roof opening; 43⅛" long x 18⅛" wide

Subject to change without notice. Printed in the U. S. A.

14" ROOF CURB ADAPTOR
MODEL 1RC0463
(FOR DNA AND DNH UNITS)

FORM 530.46-SD11Y (1095)
Supersedes: 530.46-SD11Y (895)

YORK
Heating and Air Conditioning

Manufacturer drawing · page 1 · https://fwwebbimage.fwwebb.com/ProductInfo/SD11Y.PDF

TOP VIEW · LOOKING DOWN ON THE CURB · TO SCALE

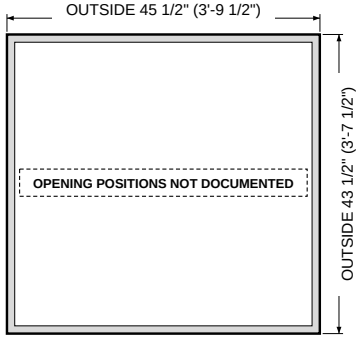

Grey band = curb rail, 1 1/8" wide. Inner line = INSIDE of rail: 43 1/4 × 41 1/4" (outside minus 2 × rail, calculated).
Supply opening 22 × 17 5/8": size documented, position not documented (not drawn).
Return opening 17 1/4 × 17 5/8": size documented, position not documented (not drawn).
Measure here: OUTSIDE of the curb rail with a tape; unit end not documented.

York/JCI — VERIFIED
Part # 1RC0463 (14 in roof curb ADAPTOR)
OUTSIDE 45 1/2 × 43 1/2" · Height 14 in · Tons ~2-5 · legacy
Ref: length = 45-1/2 side, x from the end where the 17-1/4 opening sits; derived: rail (45.5-43.25)/2 = 1.125 (printed 1-1/8), sup_x = 1.125+17.25+4 (17-1/4 + 4 + 22 = 43-1/4 inside, closes). Sheet does NOT label which opening is return/supply; assignment follows the Affinity DNP Fig 14 layout (same stack). Width offset not resolved.

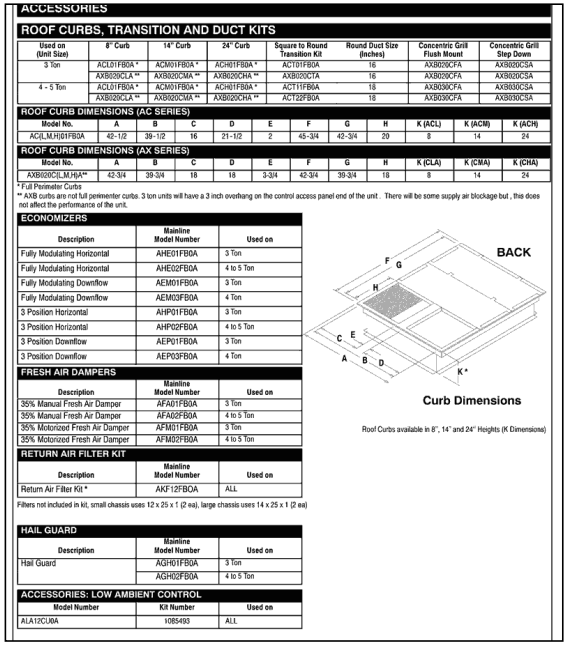

ACCESSORIES

ROOF CURBS, TRANSITION AND DUCT KITS

Used on (Unit Size)	8" Curb	14" Curb	24" Curb	Square to Round Transition Kit	Round Duct Size (Inches)	Concentric Grill Flush Mount	Concentric Grill Step Down
3 Ton	ACL01FB0A *	ACM01FB0A *	ACH01FB0A *	ACT01FB0A	16	AXB020CFA	AXB020CSA
	AXB020CLA **	AXB020CMA **	AXB020CHA **	AXB020CTA	16	AXB020CFA	AXB020CSA
4 – 5 Ton	ACL01FB0A *	ACM01FB0A *	ACH01FB0A *	ACT11FB0A	18	AXB030CFA	AXB030CSA
	AXB020CLA **	AXB020CMA **	AXB020CHA **	ACT12FB0A	18	AXB030CFA	AXB030CSA

ROOF CURB DIMENSIONS (AC SERIES)

Model No.	A	B	C	D	E	F	G	H	K (ACL)	K (ACM)	K (ACH)
AC[L,M,H]01FB0A	42-1/2	39-1/2	16	21-1/2	2	45-3/4	42-3/4	20	8	14	24

ROOF CURB DIMENSIONS (AX SERIES)

Model No.	A	B	C	D	E	F	G	H	K (CLA)	K (CMA)	K (CHA)
AXB020C[L,M,H]A**	42-3/4	39-3/4	18	18	3-3/4	42-3/4	39-3/4	18	8	14	24

* Full Perimeter Curbs
** AXB curbs are not full perimeter curbs. 3 ton units will have a 3 inch overhang on the control access panel end of the unit . There will be some supply air blockage but , this does not affect the performance of the unit.

ECONOMIZERS

Description	Mainline Model Number	Used on
Fully Modulating Horizontal	AHE01FB0A	3 Ton
Fully Modulating Horizontal	AHE02FB0A	4 to 5 Ton
Fully Modulating Downflow	AEM01FB0A	3 Ton
Fully Modulating Downflow	AEM03FB0A	4 Ton
3 Position Horizontal	AHP01FB0A	3 Ton
3 Position Horizontal	AHP02FB0A	4 to 5 Ton
3 Position Downflow	AEP01FB0A	3 Ton
3 Position Downflow	AEP03FB0A	4 Ton

Curb Dimensions

Roof Curbs available in 8", 14" and 24" Heights (K Dimensions)

FRESH AIR DAMPERS

Description	Mainline Model Number	Used on
35% Manual Fresh Air Damper	AFA01FB0A	3 Ton
35% Manual Fresh Air Damper	AFA02FB0A	4 to 5 Ton
35% Motorized Fresh Air Damper	AFM01FB0A	3 Ton
35% Motorized Fresh Air Damper	AFM02FB0A	4 to 5 Ton

RETURN AIR FILTER KIT

Description	Mainline Model Number	Used on
Return Air Filter Kit *	AKF12FB0A	ALL

Filters not included in kit, small chassis uses 12 x 25 x 1 (2 ea), large chassis uses 14 x 25 x 1 (2 ea)

HAIL GUARD

Description	Mainline Model Number	Used on
Hail Guard	AGH01FB0A	3 Ton
	AGH02FB0A	4 to 5 Ton

ACCESSORIES: LOW AMBIENT CONTROL

Model Number	Kit Number	Used on
A1A12CU8A	1085493	ALL

Manufacturer drawing · page 5 · https://www.shareddocs.com/hvac/docs/1011/Public/02/51371120106_ICP_2567.pdf

TOP VIEW · LOOKING DOWN ON THE CURB · TO SCALE

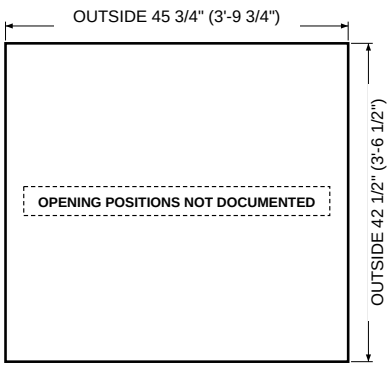

Rail width not documented, so the inside line is not drawn.
Supply opening 16 × 20": size documented, position not documented (not drawn).
Return opening 21 1/2 × 20": size documented, position not documented (not drawn).
Measure here: OUTSIDE of the curb rail with a tape; unit end not documented.

Carrier/Bryant/ICP — VERIFIED
Part # ACL01FB0A (8 in) / ACM01FB0A (14 in) / ACH01FB0A (24 in), full perimeter
OUTSIDE 45 3/4 × 42 1/2" · Height 8 / 14 / 24 in · Tons 3-5 T · legacy
Ref: sizes only: C 16 and D 21-1/2 along the 42-1/2 side with a 2 in rail between (E), H 20 across; which opening is supply vs return and the x/y are not printed

SOURCE EXCERPT (left: the cited page of the manufacturer or curb-maker document) beside our TOP VIEW drawing (right, to scale, looking down).
Openings are drawn only where their offsets are documented; offsets run from the OUTSIDE left end and OUTSIDE bottom side. Curb-maker sources are UNVERIFIED.

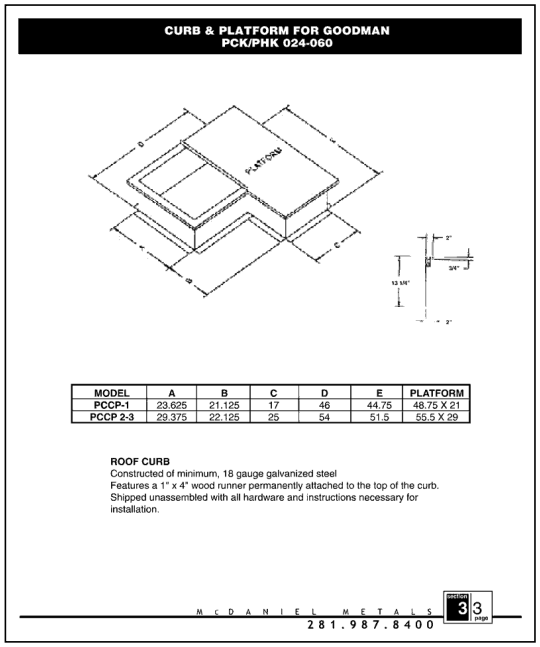

CURB & PLATFORM FOR GOODMAN
PCK/PHK 024-060

PLATFORM

MODEL	A	B	C	D	E	PLATFORM
PCCP-1	23.625	21.125	17	46	44.75	48.75 X 21
PCCP 2-3	29.375	22.125	25	54	51.5	55.5 X 29

ROOF CURB
Constructed of minimum, 18 gauge galvanized steel
Features a 1" x 4" wood runner permanently attached to the top of the curb.
Shipped unassembled with all hardware and instructions necessary for installation.

M c D A N I E L M E T A L S
281.987.8400
SECTION 3 page

TOP VIEW · LOOKING DOWN ON THE CURB · TO SCALE

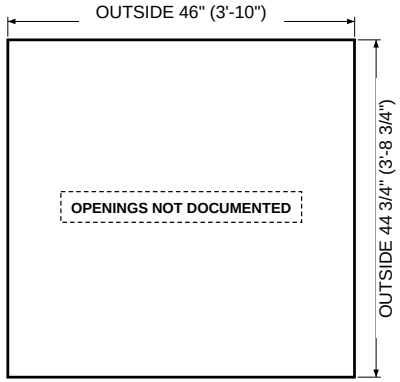

Rail width not documented, so the inside line is not drawn.
Measure here: OUTSIDE of the curb rail with a tape; unit end not documented.

Daikin/Goodman/Amana — UNVERIFIED
Part # PCCP-1 (curb & platform)
OUTSIDE 46 × 44 3/4" · Height 13.25 (section detail / low-resolution scan) in · Tons 2-3 T · legacy
Also OUTSIDE (if A–E are inside sizes) 50 × 48 3/4"
Note: L-shaped curb + platform drawn as its bounding box D × E; the duct curb is the A-deep strip under the blower end, the platform takes the rest.
Openings not dimensioned.

Curb-maker drawing (UNVERIFIED) · page 10 · https://documents.alpinehomeair.com/product/McDaniel%20Metals%20Spec%20Sheets.pdf

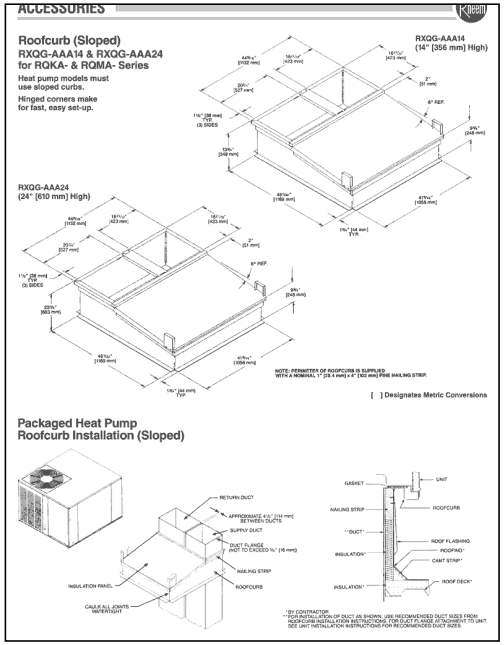

ACCESSORIES

Roofcurb (Sloped)
RXQG-AAA14 & RXQG-AAA24
for RQKA- & RQMA- Series
Heat pump models must use sloped curbs.
Hinged corners make for fast, easy set-up.

RXQG-AAA14 (14" [356 mm] High)
RXQG-AAA24 (24" [610 mm] High)

NOTE: PERIMETER OF ROOFCURB IS SUPPLIED WITH A NOMINAL 1" [25.4 mm] x 4" [101 mm] FIRE NAILING STRIP.

[ ] Designates Metric Conversions

Packaged Heat Pump
Roofcurb Installation (Sloped)

RETURN DUCT
SUPPLY DUCT
NAILING STRIP
ROOFCURB
INSULATION PANEL
GASKET
UNIT
ROOF FLASHING
ROOFPAD*
CANT STRIP*
ROOF DECK*
INSULATION*

TOP VIEW · LOOKING DOWN ON THE CURB · TO SCALE

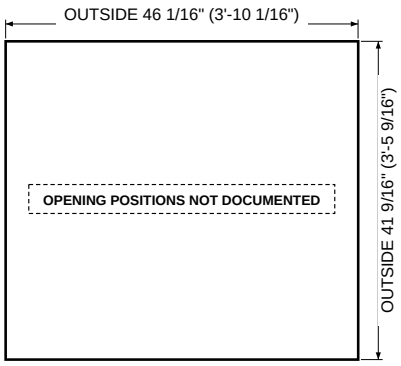

Rail width not documented, so the inside line is not drawn.
Supply opening 16 11/16 × 16 11/16": size documented, position not documented (not drawn).
Return opening 16 11/16 × 20 3/4": size documented, position not documented (not drawn).
Measure here: OUTSIDE of the curb rail with a tape; unit end not documented.

Rheem/Ruud — UNVERIFIED
Part # RXQG-AAA14 / RXQG-AAA24 (sloped; hinge corners)
OUTSIDE 46 1/16 × 41 9/16" · Height 14 (13 3/4 high side, 9 3/4 low side) / 24 (23 3/4 high side, 9 3/4 low side) in · Tons 3-4 T · legacy
Ref: sizes only (read off the isometric; no x/y printed)

Manufacturer drawing · page 34 · https://api.ferguson.com/dar-step-service/Query?ASSET_ID=4570534&USE_TYPE=PARTS&PRODUCT_ID=5

SOURCE EXCERPT (left: the cited page of the manufacturer or curb-maker document) beside our TOP VIEW drawing (right, to scale, looking down).
Openings are drawn only where their offsets are documented; offsets run from the OUTSIDE left end and OUTSIDE bottom side. Curb-maker sources are UNVERIFIED.

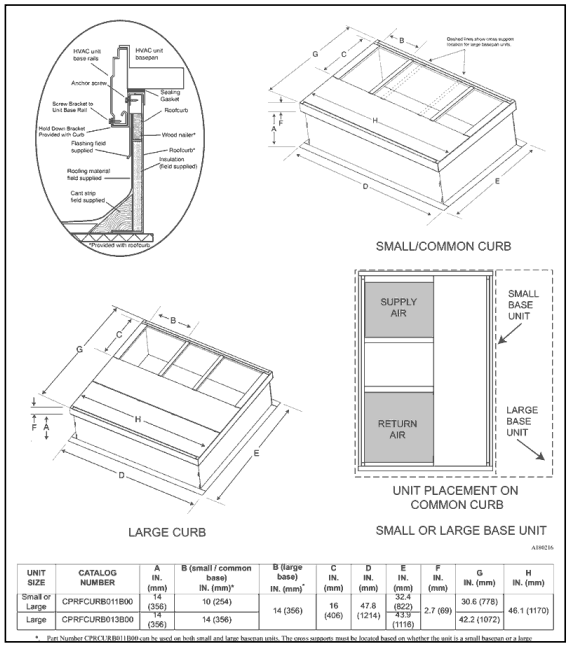

UNIT SIZE	CATALOG NUMBER	A IN. (mm)	B (small / common base) IN. (mm)*	B (large base) IN. (mm)*	C IN. (mm)	D IN. (mm)	E IN. (mm)	F IN. (mm)	G IN. (mm)	H IN. (mm)
Small or Large	CPRFCURB011B00	14 (356)	10 (254)	14 (356)	16 (406)	47.8 (1214)	32.4 (822) 43.9 (1116)	2.7 (69)	30.6 (778) 42.2 (1072)	46.1 (1170)
Large	CPRFCURB013B00	14 (356)	14 (356)							

* Part Number CPRCURB011B00 can be used on both small and large basepan units. The cross supports must be located based on whether the unit is a small basepan or a large

Manufacturer drawing · page 8 · https://www.shareddocs.com/hvac/docs/1011/Public/05/46201200408.pdf

TOP VIEW · LOOKING DOWN ON THE CURB · TO SCALE

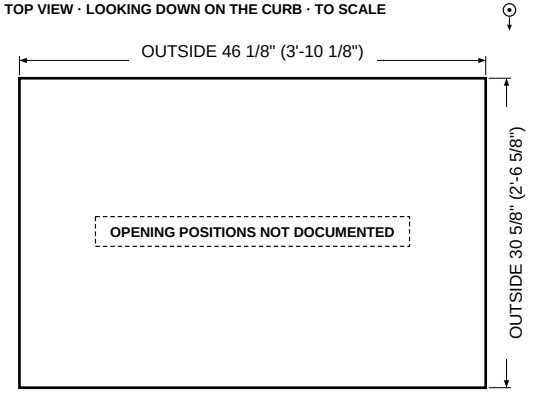

Rail width not documented, so the inside line is not drawn.
Opening sizes are in the list; their positions are not documented, so none are drawn.
Measure here: OUTSIDE of the curb rail with a tape; unit end not documented.

Carrier/Bryant/ICP **VERIFIED**
Part # CPRFCURB011B00 (14 in, small/common); older CPRFCURB010A00 (11 in) / CPRFCURB011A00 (14 in)
OUTSIDE 46 1/8 × 30 5/8" · Height 14 (B00) / 11 or 14 (older A00) in · Tons 2-5 T (small basepan ~2-3.5 T; check unit) · legacy
Also OUTSIDE (2nd outline on drawing) 47 13/16 × 32 3/8"
Ref: openings not dimensioned; B (cross-support spacing 10 small / 14 large base) and C=16 are cross-support locations, not openings

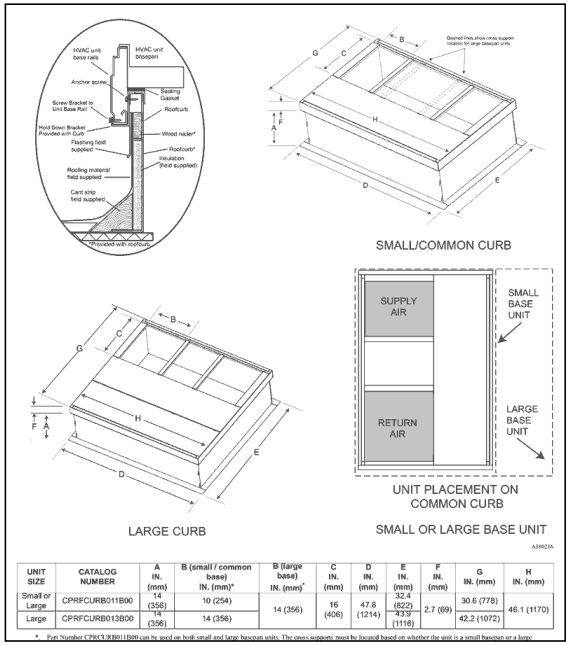

UNIT SIZE	CATALOG NUMBER	A IN. (mm)	B (small / common base) IN. (mm)*	B (large base) IN. (mm)*	C IN. (mm)	D IN. (mm)	E IN. (mm)	F IN. (mm)	G IN. (mm)	H IN. (mm)
Small or Large	CPRFCURB011B00	14 (356)	10 (254)	14 (356)	16 (406)	47.8 (1214)	32.4 (822) 43.9 (1116)	2.7 (69)	30.6 (778) 42.2 (1072)	46.1 (1170)
Large	CPRFCURB013B00	14 (356)	14 (356)							

* Part Number CPRCURB011B00 can be used on both small and large basepan units. The cross supports must be located based on whether the unit is a small basepan or a large

Manufacturer drawing · page 8 · https://www.shareddocs.com/hvac/docs/1011/Public/05/46201200408.pdf

TOP VIEW · LOOKING DOWN ON THE CURB · TO SCALE

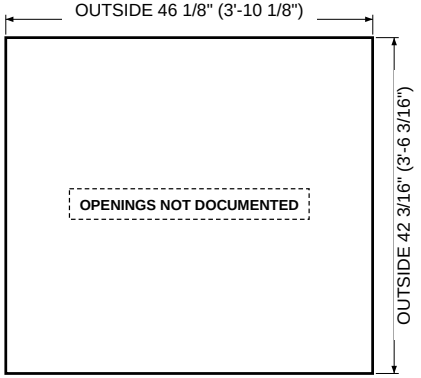

Rail width not documented, so the inside line is not drawn.
Measure here: OUTSIDE of the curb rail with a tape; unit end not documented.

Carrier/Bryant/ICP **VERIFIED**
Part # CPRFCURB013B00 (14 in, large); older CPRFCURB012A00 (11 in) / CPRFCURB013A00 (14 in)
OUTSIDE 46 1/8 × 42 3/16" · Height 14 (B00) / 11 or 14 (older A00) in · Tons 3.5-5 T (large basepan; check unit) · legacy
Also OUTSIDE (2nd outline on drawing) 47 13/16 × 43 7/8"
Ref: openings not dimensioned; B (cross-support spacing 10 small / 14 large base) and C=16 are cross-support locations, not openings

SOURCE EXCERPT (left: the cited page of the manufacturer or curb-maker document) beside our TOP VIEW drawing (right, to scale, looking down).
Openings are drawn only where their offsets are documented; offsets run from the OUTSIDE left end and OUTSIDE bottom side. Curb-maker sources are UNVERIFIED.

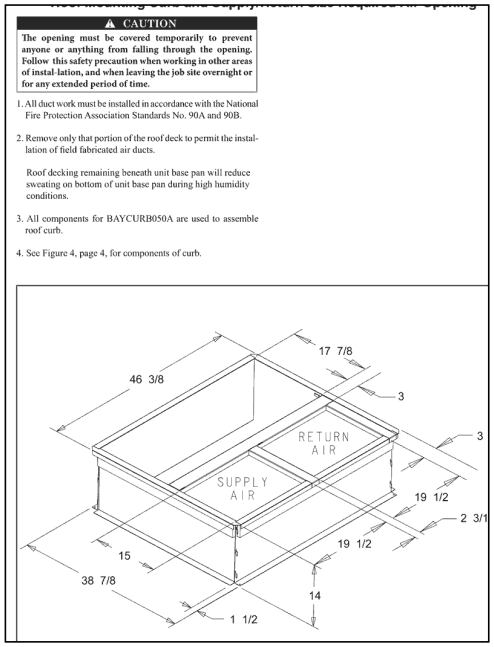

⚠ CAUTION

The opening must be covered temporarily to prevent anyone or anything from falling through the opening. Follow this safety precaution when working in other areas of instal-lation, and when leaving the job site overnight or for any extended period of time.

1. All duct work must be installed in accordance with the National Fire Protection Association Standards No. 90A and 90B.
2. Remove only that portion of the roof deck to permit the instal-lation of field fabricated air ducts.

   Roof decking remaining beneath unit base pan will reduce sweating on bottom of unit base pan during high humidity conditions.
3. All components for BAYCURB050A are used to assemble roof curb.
4. See Figure 4, page 4, for components of curb.

Manufacturer drawing · page 3 · https://fergusonprod.a.bigcontent.io/v1/static/2837259_14101315_installation

TOP VIEW · LOOKING DOWN ON THE CURB · TO SCALE

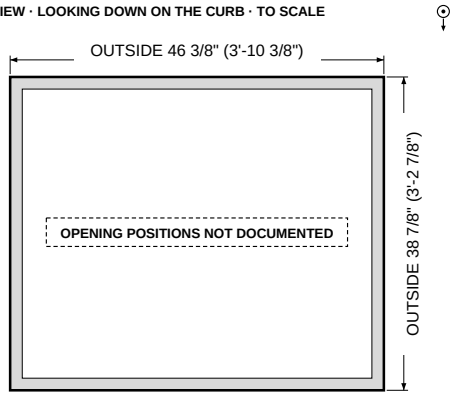

Grey band = curb rail, 1 1/2" wide. Inner line = INSIDE of rail: 43 3/8 × 35 7/8" (outside minus 2 × rail, calculated).
Supply opening 19 1/2 × 15": size documented, position not documented (not drawn).
Return opening 19 1/2 × 17 7/8": size documented, position not documented (not drawn).
Measure here: OUTSIDE of the curb rail with a tape; unit end not documented.

Trane/American Standard — **VERIFIED**
Part # BAYCURB050A
OUTSIDE 46 3/8 × 38 7/8" · Height 14 in · 1.5-3 T · legacy
Ref: y from outside of the long side next to the supply; derived from width chain 1.5 + 15 + 3 + 17.875 + 1.5 = 38.875 (closes); x offsets omitted: Fig.3 shows 2-3/16 and 3-5/8 along the length but the datum (outside vs inside of end rail) and which opening each belongs to are not clear

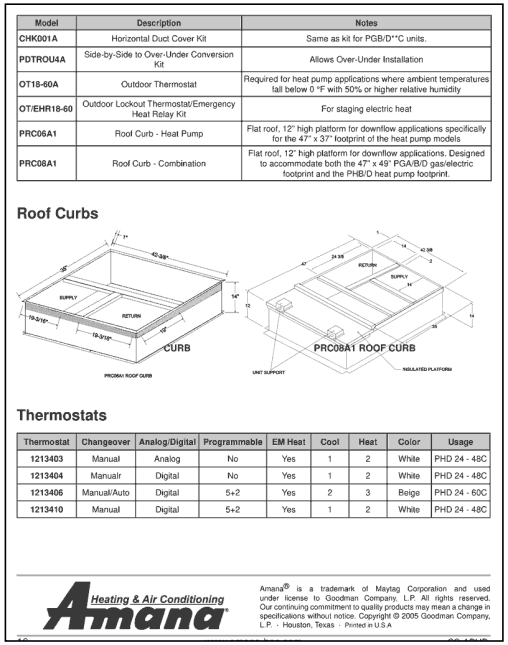

Model	Description	Notes
CHK001A	Horizontal Duct Cover Kit	Same as kit for PGB/D**C units.
PDTROU4A	Side-by-Side to Over-Under Conversion Kit	Allows Over-Under Installation
OT18-60A	Outdoor Thermostat	Required for heat pump applications where ambient temperatures fall below 0 °F with 50% or higher relative humidity
OT/EHR18-60	Outdoor Lockout Thermostat/Emergency Heat Relay Kit	For staging electric heat
PRC06A1	Roof Curb - Heat Pump	Flat roof, 12" high platform for downflow applications specifically for the 47" x 37" footprint of the heat pump models
PRC08A1	Roof Curb - Combination	Flat roof, 12" high platform for downflow applications. Designed to accommodate both the 47" x 49" PGA/B/D gas/electric footprint and the PHB/D heat pump footprint.

Roof Curbs

Thermostats

Thermostat	Changeover	Analog/Digital	Programmable	EM Heat	Cool	Heat	Color	Usage
1213403	Manual	Analog	No	Yes	1	2	White	PHD 24 - 48C
1213404	Manualr	Digital	No	Yes	1	2	White	PHD 24 - 48C
1213406	Manual/Auto	Digital	5+2	Yes	2	3	Beige	PHD 24 - 60C
1213410	Manual	Digital	5+2	Yes	1	2	White	PHD 24 - 48C

Heating & Air Conditioning Amana®

Amana® is a trademark of Maytag Corporation and used under license to Goodman Company, L.P. All rights reserved. Our continuing commitment to quality products may mean a change in specifications without notice. Copyright © 2005 Goodman Company, L.P. · Houston, Texas · Printed in U.S.A

Manufacturer drawing · page 16 · https://mobile.goodmanmfg.com/mobileapp/stellent/pdf/infoPdf/Lit/SS-APHD.pdf

TOP VIEW · LOOKING DOWN ON THE CURB · TO SCALE

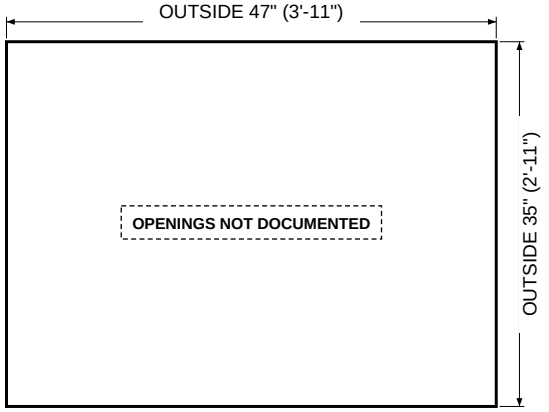

Rail width not documented, so the inside line is not drawn.
Measure here: OUTSIDE of the curb rail with a tape; unit end not documented.

Daikin/Goodman/Amana — **UNVERIFIED**
Part # PRC08A1 (Amana combination roof curb with insulated platform)
OUTSIDE 47 × 35" · Height 14 (12 platform) in · Tons 3-5 T · legacy

SOURCE EXCERPT (left: the cited page of the manufacturer or curb-maker document) beside our TOP VIEW drawing (right, to scale, looking down).
Openings are drawn only where their offsets are documented; offsets run from the OUTSIDE left end and OUTSIDE bottom side. Curb-maker sources are UNVERIFIED.

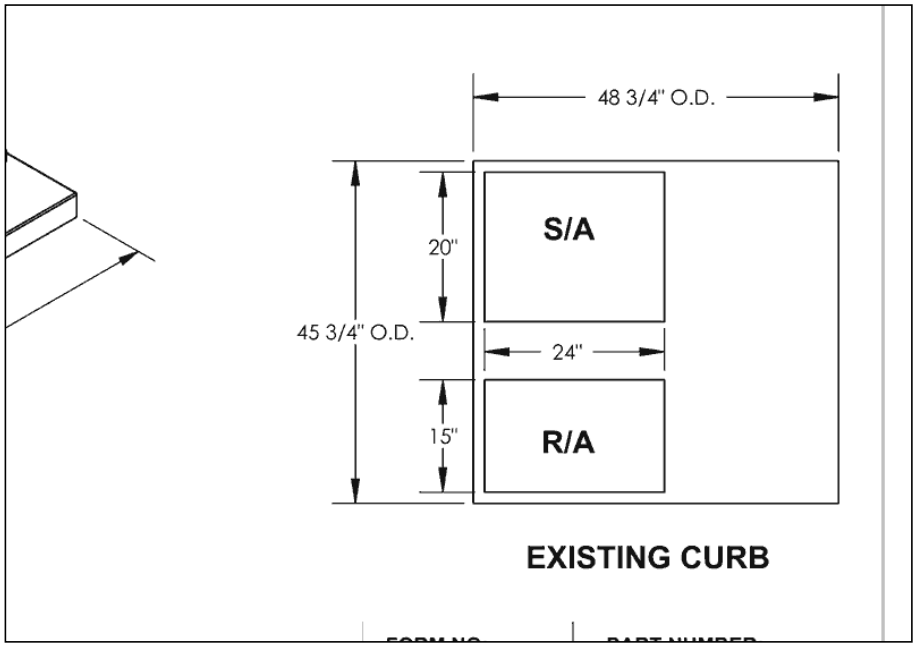

Curb-maker drawing (UNVERIFIED) · page 1 · https://www.proventusa.com/-/media/provent/catalog/pdf/york-curb-adapters/curb/lx-larg

TOP VIEW · LOOKING DOWN ON THE CURB · TO SCALE

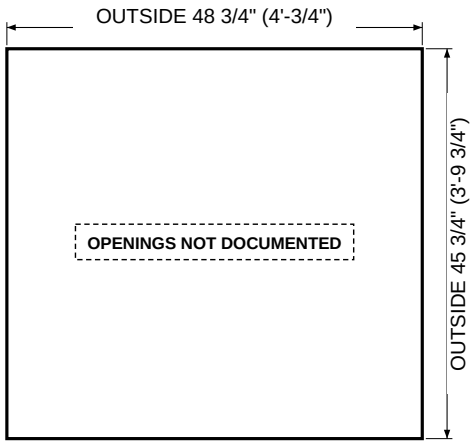

Rail width not documented, so the inside line is not drawn.
Measure here: OUTSIDE of the curb rail with a tape; unit end not documented.

Trane/American Standard — UNVERIFIED
Part # (factory curb part unknown)
OUTSIDE 48 3/4 × 45 3/4" · Tons 3-5 T · legacy

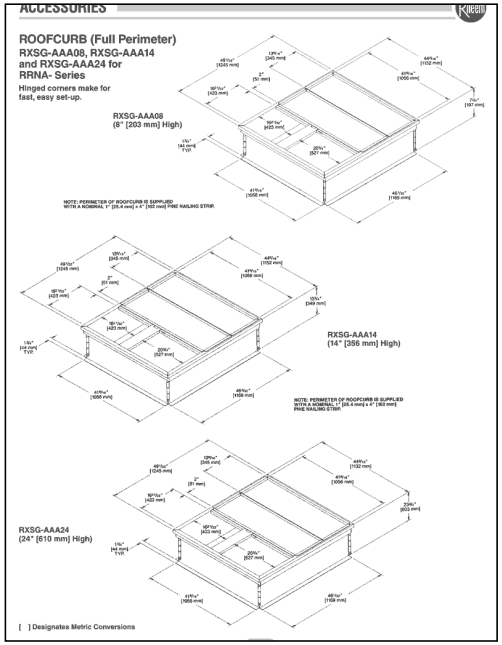

Manufacturer drawing · page 34 · https://resource.gemaire.com/is/content/Watscocom/Gemaire/rheem_rrna-c060jk10x_article_13692254288

TOP VIEW · LOOKING DOWN ON THE CURB · TO SCALE

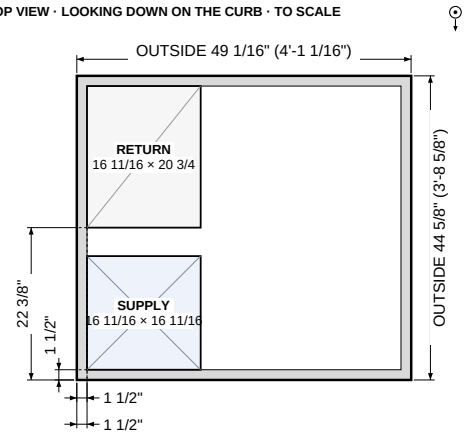

Grey band = curb rail, 1 1/2" wide. Inner line = INSIDE of rail: 46 1/16 × 41 5/8" (outside minus 2 × rail, calculated).
Offsets: from the OUTSIDE left end and the OUTSIDE bottom side of the curb to the opening's near edge. Openings are clear inside sizes.
Measure here: OUTSIDE of the curb rail with a tape; unit end not documented.

Rheem/Ruud — VERIFIED
Part # RXSG-AAA08 / RXSG-AAA14 / RXSG-AAA18 / RXSG-AAA24
OUTSIDE 49 1/16 × 44 5/8" · Height 8, 14, 18, 24 in · 2-5 T · legacy
Ref: x from the duct end, y from the long side the supply sits on (top of RXSG Fig.6); rail 1.5 = (49-1/32-46-1/32)/2; ret_y derived from the other side: 44-19/32 - 1.5 - 20-3/4 = 22-11/32 (cross support C then ~4-3/16, derived)

SOURCE EXCERPT (left: the cited page of the manufacturer or curb-maker document) beside our TOP VIEW drawing (right, to scale, looking down).
Openings are drawn only where their offsets are documented; offsets run from the OUTSIDE left end and OUTSIDE bottom side. Curb-maker sources are UNVERIFIED.

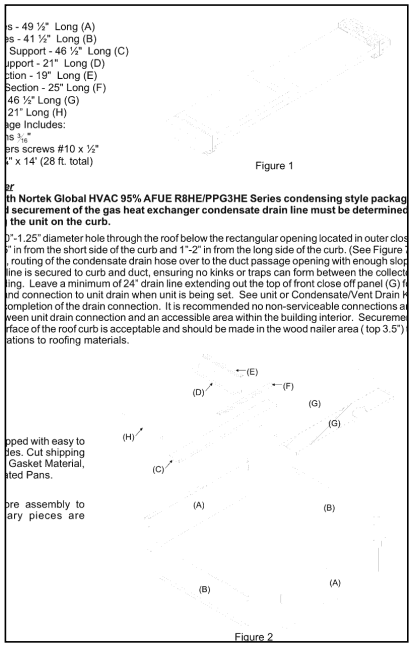
s - 49 ½" Long (A)
s - 41 ½" Long (B)
Support - 46 ½" Long (C)
upport - 21" Long (D)
ction - 19" Long (E)
Section - 25" Long (F)
46 ½" Long (G)
21" Long (H)
ge Includes:
s ¾"
ers screws #10 x ½"
" x 14' (28 ft. total)
Figure 1
er
th Nortek Global HVAC 95% AFUE R8HE/PPG3HE Series condensing style packag
f securement of the gas heat exchanger condensate drain line must be determined
the unit on the curb.
0"-1.25" diameter hole through the roof below the rectangular opening located in outer clos
" in from the short side of the curb and 1"-2" in from the long side of the curb. (See Figure
routing of the condensate drain hose over to the duct passage opening with enough slo
line is secured to curb and duct, ensuring no kinks or traps can form between the collect
ling. Leave a minimum of 24" drain line extending out the top of front close off panel (G) f
nd connection to unit drain when unit is being set. See unit or Condensate/Vent Drain H
completion of the drain connection. It is recommended no non-serviceable connections a
ween unit drain connection and an accessible area within the building interior. Securemen
rface of the roof curb is acceptable and should be made in the wood nailer area (top 3.5")
ations to roofing materials.
(E)
(D)
(F)
(G)
(G)
(H)
(C)
(A)
(B)
(A)
(B)
pped with easy to
des. Cut shipping
Gasket Material,
ted Pans.
ore assembly to
ary pieces are
Figure 2

Manufacturer drawing · page 1 · https://literature.nordyne.com/pdf/593a.pdf?docuid=6BD08928-EEEC-0C7F-06F6-72F29CF5F854&brandkey=

TOP VIEW · LOOKING DOWN ON THE CURB · TO SCALE

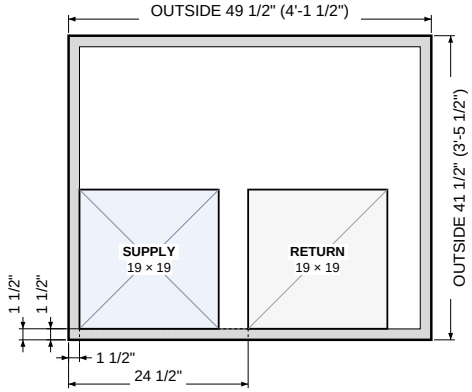

Grey band = curb rail, 1 1/2" wide. Inner line = INSIDE of rail: 46 1/2 × 38 1/2" (outside minus 2 × rail, calculated).

Offsets: from the OUTSIDE left end and the OUTSIDE bottom side of the curb to the opening's near edge. Openings are clear inside sizes.

Measure here: OUTSIDE of the curb rail with a tape; unit end not documented.

Nordyne — VERIFIED
Part # 547830/547831/547850/547851 (8/14/18/24 in)
OUTSIDE 49 1/2 × 41 1/2" · Height 8, 14, 18, 24 in · 2-6 T · legacy
Ref: x from the outside of the supply-end rail, y from the outside of the long side the openings sit against; derived = 1.5 rail + printed chain 19 / 4 / 19 / 4-1/2 (closes to 46-1/2 inside); curb openings 19 x 19 (ducts 18-1/2 sq)

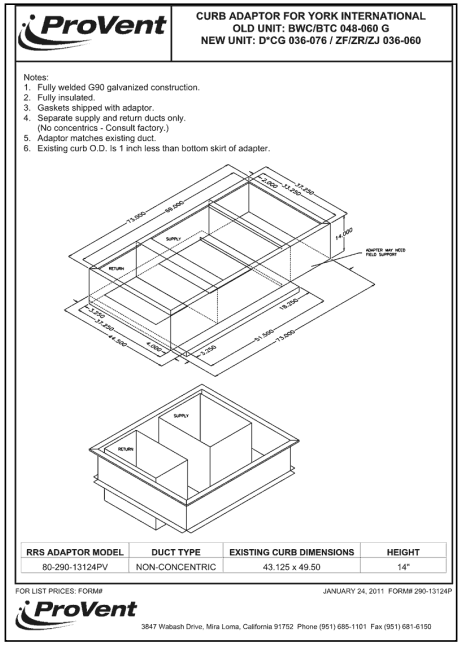
ProVent
CURB ADAPTOR FOR YORK INTERNATIONAL
OLD UNIT: BWC/BTC 048-060 G
NEW UNIT: D*CG 036-076 / ZF/ZR/ZJ 036-060
Notes:
1. Fully welded G90 galvanized construction.
2. Fully insulated.
3. Gaskets shipped with adaptor.
4. Separate supply and return ducts only. (No concentrics - Consult factory.)
5. Adaptor matches existing duct.
6. Existing curb O.D. Is 1 inch less than bottom skirt of adapter.
SUPPLY
RETURN
RRS ADAPTOR MODEL | DUCT TYPE | EXISTING CURB DIMENSIONS | HEIGHT
80-290-13124PV | NON-CONCENTRIC | 43.125 x 49.50 | 14"
FOR LIST PRICES: FORM#
JANUARY 24, 2011 FORM# 290-13124P
ProVent
3847 Wabash Drive, Mira Loma, California 91752 Phone (951) 685-1101 Fax (951) 681-6150

Curb-maker drawing (UNVERIFIED) · page 1 · https://www.proventusa.com/-/media/provent/catalog/pdf/york-curb-adapters/curb/sunlir

TOP VIEW · LOOKING DOWN ON THE CURB · TO SCALE

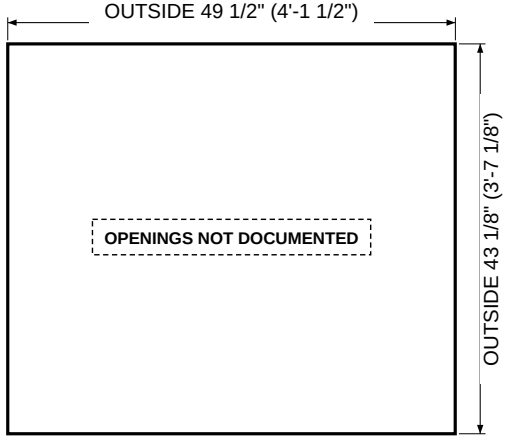

Rail width not documented, so the inside line is not drawn.

Measure here: OUTSIDE of the curb rail with a tape; unit end not documented.

Trane/American Standard — UNVERIFIED
Part # (factory curb part unknown)
OUTSIDE 49 1/2 × 43 1/8" · Height 14 in · Tons 4-5 T · legacy

SOURCE EXCERPT (left: the cited page of the manufacturer or curb-maker document) beside our TOP VIEW drawing (right, to scale, looking down).
Openings are drawn only where their offsets are documented; offsets run from the OUTSIDE left end and OUTSIDE bottom side. Curb-maker sources are UNVERIFIED.

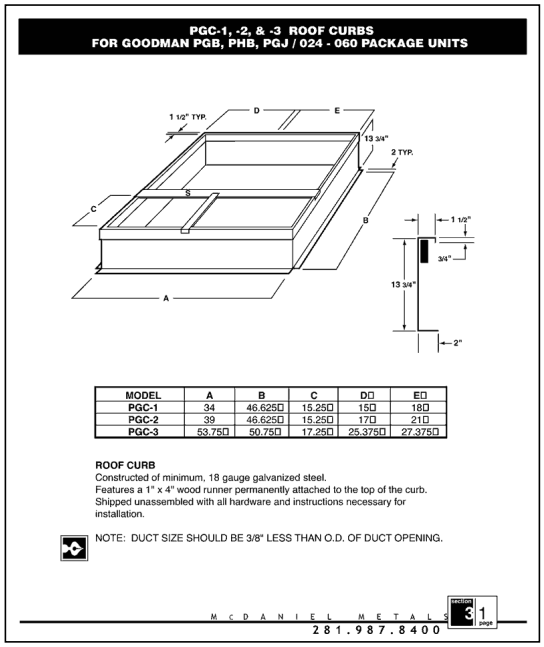

PGC-1, -2, & -3 ROOF CURBS
FOR GOODMAN PGB, PHB, PGJ / 024 - 060 PACKAGE UNITS

MODEL	A	B	C	D□	E□
PGC-1	34	46.625□	15.25□	15□	18□
PGC-2	39	46.625□	15.25□	17□	21□
PGC-3	53.75□	50.75□	17.25□	25.375□	27.375□

ROOF CURB
Constructed of minimum, 18 gauge galvanized steel.
Features a 1" x 4" wood runner permanently attached to the top of the curb.
Shipped unassembled with all hardware and instructions necessary for installation.

NOTE: DUCT SIZE SHOULD BE 3/8" LESS THAN O.D. OF DUCT OPENING.

Curb-maker drawing (UNVERIFIED) · page 8 · https://documents.alpinehomeair.com/product/McDaniel%20Metals%20Spec%20Sheets.pdf

TOP VIEW · LOOKING DOWN ON THE CURB · TO SCALE

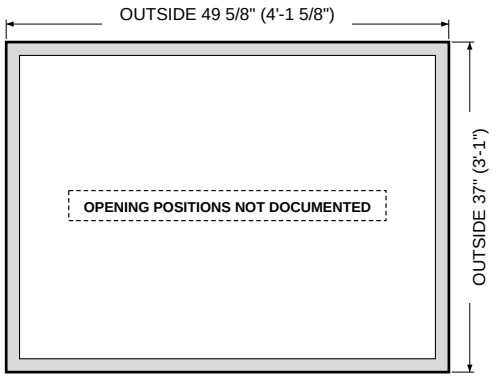

Grey band = curb rail, 1 1/2" wide. Inner line = INSIDE of rail: 46 5/8 × 34" (outside minus 2 × rail, calculated).
Opening sizes are in the list; their positions are not documented, so none are drawn.
Measure here: OUTSIDE of the curb rail with a tape; unit end not documented.

Daikin/Goodman/Amana CALCULATED
Part # PGC-1
OUTSIDE 49 5/8 × 37" · Height 13.75 in · 2-3 T · legacy
Ref: sizes only: McDaniel gives a 15.25 (C) deep bay along the curb length holding two openings 15 and 18 (D,E) across the width with a ~1 in divider; supply vs return not labeled and plan offsets not dimensioned

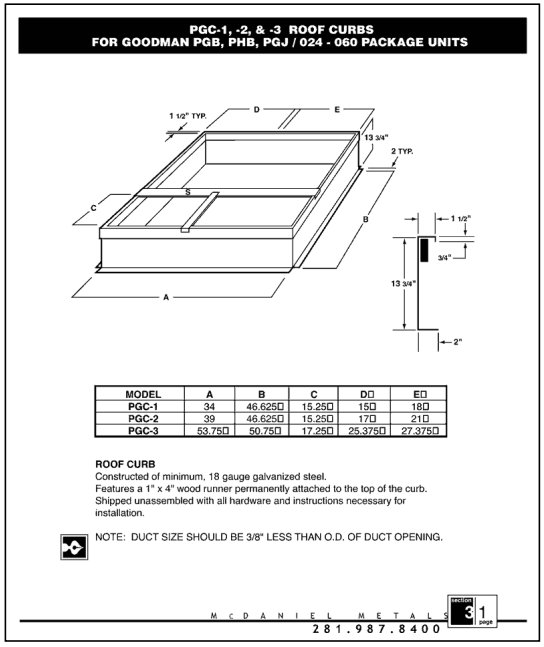

PGC-1, -2, & -3 ROOF CURBS
FOR GOODMAN PGB, PHB, PGJ / 024 - 060 PACKAGE UNITS

MODEL	A	B	C	D□	E□
PGC-1	34	46.625□	15.25□	15□	18□
PGC-2	39	46.625□	15.25□	17□	21□
PGC-3	53.75□	50.75□	17.25□	25.375□	27.375□

ROOF CURB
Constructed of minimum, 18 gauge galvanized steel.
Features a 1" x 4" wood runner permanently attached to the top of the curb.
Shipped unassembled with all hardware and instructions necessary for installation.

NOTE: DUCT SIZE SHOULD BE 3/8" LESS THAN O.D. OF DUCT OPENING.

Curb-maker drawing (UNVERIFIED) · page 8 · https://documents.alpinehomeair.com/product/McDaniel%20Metals%20Spec%20Sheets.pdf

TOP VIEW · LOOKING DOWN ON THE CURB · TO SCALE

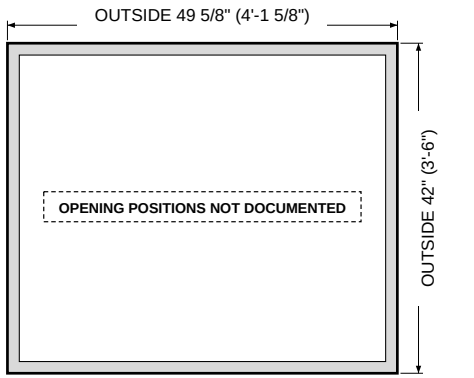

Grey band = curb rail, 1 1/2" wide. Inner line = INSIDE of rail: 46 5/8 × 39" (outside minus 2 × rail, calculated).
Opening sizes are in the list; their positions are not documented, so none are drawn.
Measure here: OUTSIDE of the curb rail with a tape; unit end not documented.

Daikin/Goodman/Amana CALCULATED
Part # PGC-2
OUTSIDE 49 5/8 × 42" · Height 13.75 in · 2.5-3.5 T · legacy
Ref: sizes only: 15.25 (C) deep bay along the length, two openings 17 and 21 (D,E) across the width, ~1 in divider; supply vs return not labeled, offsets not dimensioned

SOURCE EXCERPT (left: the cited page of the manufacturer or curb-maker document) beside our TOP VIEW drawing (right, to scale, looking down).
Openings are drawn only where their offsets are documented; offsets run from the OUTSIDE left end and OUTSIDE bottom side. Curb-maker sources are UNVERIFIED.

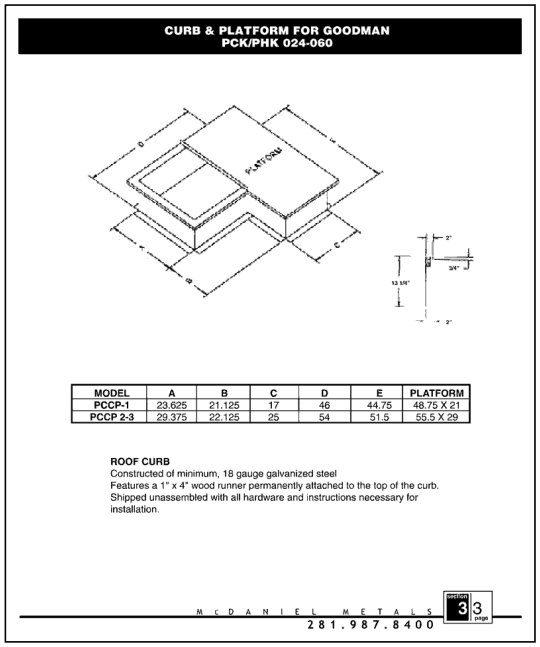

CURB & PLATFORM FOR GOODMAN
PCK/PHK 024-060

MODEL	A	B	C	D	E	PLATFORM
PCCP-1	23.625	21.125	17	46	44.75	48.75 X 21
PCCP 2-3	29.375	22.125	25	54	51.5	55.5 X 29

ROOF CURB
Constructed of minimum, 18 gauge galvanized steel
Features a 1" x 4" wood runner permanently attached to the top of the curb.
Shipped unassembled with all hardware and instructions necessary for installation.

M C D A N I E L M E T A L S
281.987.8400
SHEET 3 page

Curb-maker drawing (UNVERIFIED) · page 10 · https://documents.alpinehomeair.com/product/McDaniel%20Metals%20Spec%20Sheets.pdf

TOP VIEW · LOOKING DOWN ON THE CURB · TO SCALE

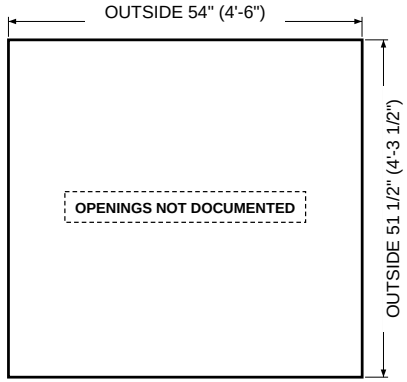

Rail width not documented, so the inside line is not drawn.
Measure here: OUTSIDE of the curb rail with a tape; unit end not documented.

Daikin/Goodman/Amana — UNVERIFIED
Part # PCCP2-3 (curb & platform)
OUTSIDE 54 × 51 1/2" · Height 13.25 (section detail / low-resolution scan) in · Tons 2-5 T · legacy
Also OUTSIDE (if A–E are inside sizes) 58 × 55 1/2"
Note: L-shaped curb + platform drawn as its bounding box D × E; the duct curb is the A-deep strip under the blower end, the platform takes the rest.
Openings not dimensioned.

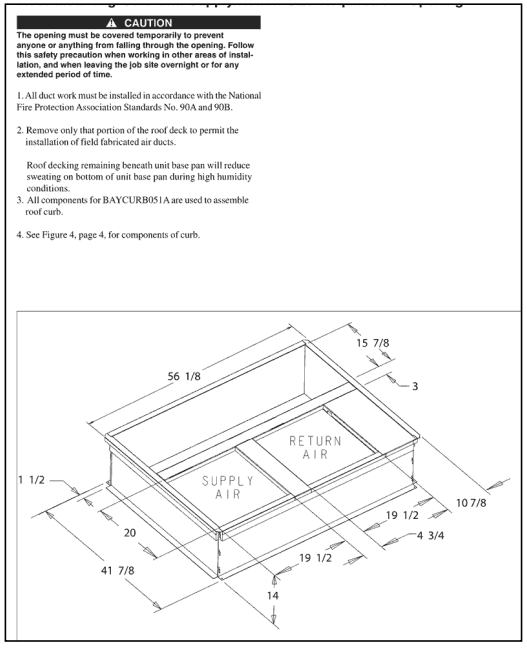

⚠ CAUTION
The opening must be covered temporarily to prevent anyone or anything from falling through the opening. Follow this safety precaution when working in other areas of installation, and when leaving the job site overnight or for any extended period of time.

1. All duct work must be installed in accordance with the National Fire Protection Association Standards No. 90A and 90B.
2. Remove only that portion of the roof deck to permit the installation of field fabricated air ducts.

   Roof decking remaining beneath unit base pan will reduce sweating on bottom of unit base pan during high humidity conditions.
3. All components for BAYCURB051A are used to assemble roof curb.
4. See Figure 4, page 4, for components of curb.

Manufacturer drawing · page 3 · https://www.asdealernet.com/Resources/Literature/pdf/BAYCURB051_5%20IGAT.pdf

TOP VIEW · LOOKING DOWN ON THE CURB · TO SCALE

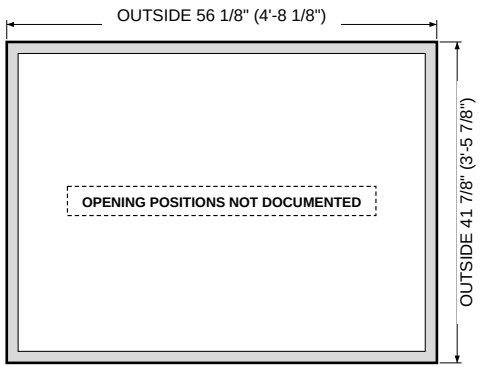

Grey band = curb rail, 1 1/2" wide. Inner line = INSIDE of rail: 53 1/8 × 38 7/8" (outside minus 2 × rail, calculated).
Supply opening 19 1/2 × 20": size documented, position not documented (not drawn).
Return opening 19 1/2 × 15 7/8": size documented, position not documented (not drawn).
Measure here: OUTSIDE of the curb rail with a tape; unit end not documented.

Trane/American Standard — VERIFIED
Part # BAYCURB051A
OUTSIDE 56 1/8 × 41 7/8" · Height 14 in · 3.5-5 T · legacy
Ref: y from outside of the long side next to the supply; derived from width chain 1.5 + 20 + 3 + 15.875 + 1.5 = 41.875 (closes); x offsets omitted: 10-7/8 and 4-3/4 run along the length but their datum/opening pairing is not clear

SOURCE EXCERPT (left: the cited page of the manufacturer or curb-maker document) beside our TOP VIEW drawing (right, to scale, looking down).
Openings are drawn only where their offsets are documented; offsets run from the OUTSIDE left end and OUTSIDE bottom side. Curb-maker sources are UNVERIFIED.

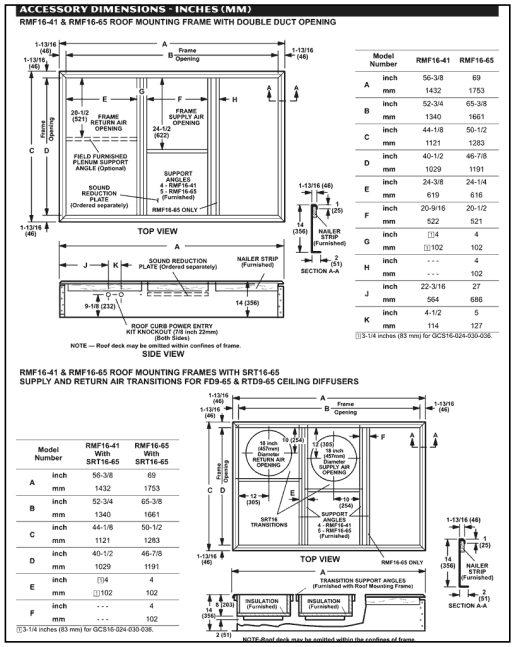

Manufacturer drawing · page 25 · https://tech.lennoxintl.com/c03e7o14l/viu12ch2uv/ehb_gcs16_gcs20sm_0209.pdf

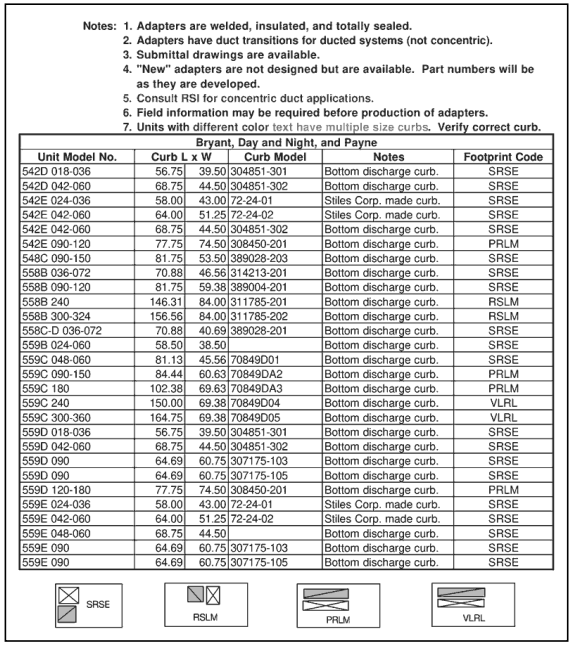

Notes:
1. Adapters are welded, insulated, and totally sealed.
2. Adapters have duct transitions for ducted systems (not concentric).
3. Submittal drawings are available.
4. "New" adapters are not designed but are available. Part numbers will be as they are developed.
5. Consult RSI for concentric duct applications.
6. Field information may be required before production of adapters.
7. Units with different color text have multiple size curbs. Verify correct curb.

Bryant, Day and Night, and Payne					
Unit Model No.	Curb L	x W	Curb Model	Notes	Footprint Code
542D 018-036	56.75	39.50	304851-301	Bottom discharge curb.	SRSE
542D 042-060	68.75	44.50	304851-302	Bottom discharge curb.	SRSE
542E 024-036	58.00	43.00	72-24-01	Stiles Corp. made curb.	SRSE
542E 042-060	64.00	51.25	72-24-02	Stiles Corp. made curb.	SRSE
542E 042-060	68.75	44.50	304851-302	Bottom discharge curb.	SRSE
542E 090-120	77.75	74.50	308450-201	Bottom discharge curb.	PRLM
548C 090-150	81.75	53.50	389028-203	Bottom discharge curb.	SRSE
558B 036-072	70.88	46.56	314213-201	Bottom discharge curb.	SRSE
558B 090-120	81.75	59.38	389004-201	Bottom discharge curb.	SRSE
558B 240	146.31	84.00	311785-201	Bottom discharge curb.	RSLM
558B 300-324	156.56	84.00	311785-202	Bottom discharge curb.	RSLM
558C-D 036-072	70.88	40.69	389028-201	Bottom discharge curb.	SRSE
559B 024-060	58.50	38.50		Bottom discharge curb.	SRSE
559C 048-060	81.13	45.56	70849D01	Bottom discharge curb.	SRSE
559C 090-150	84.44	60.63	70849DA2	Bottom discharge curb.	PRLM
559C 180	102.38	69.63	70849DA3	Bottom discharge curb.	PRLM
559C 240	150.00	69.38	70849D04	Bottom discharge curb.	VLRL
559C 300-360	164.75	69.38	70849D05	Bottom discharge curb.	VLRL
559D 018-036	56.75	39.50	304851-301	Bottom discharge curb.	SRSE
559D 042-060	68.75	44.50	304851-302	Bottom discharge curb.	SRSE
559D 090	64.69	60.75	307175-103	Bottom discharge curb.	SRSE
559D 090	64.69	60.75	307175-105	Bottom discharge curb.	SRSE
559D 120-180	77.75	74.50	308450-201	Bottom discharge curb.	PRLM
559E 024-036	58.00	43.00	72-24-01	Stiles Corp. made curb.	SRSE
559E 042-060	64.00	51.25	72-24-02	Stiles Corp. made curb.	SRSE
559E 048-060	68.75	44.50		Bottom discharge curb.	SRSE
559E 090	64.69	60.75	307175-103	Bottom discharge curb.	SRSE
559E 090	64.69	60.75	307175-105	Bottom discharge curb.	SRSE

SRSE RSLM PRLM VLRL

Curb-maker drawing (UNVERIFIED) · page 1 · https://www.ruskinrooftopsystems.com/Portals/5/bdp_web_adapters.pdf

TOP VIEW · LOOKING DOWN ON THE CURB · TO SCALE

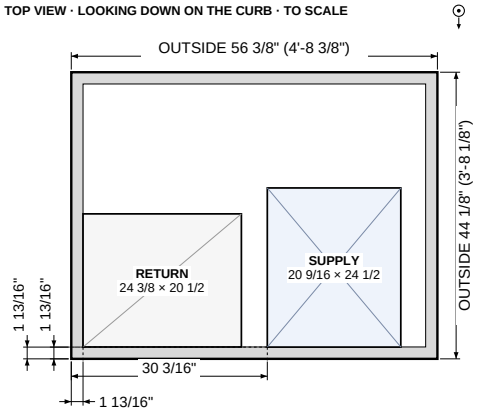

Grey band = curb rail, 1 13/16" wide. Inner line = INSIDE of rail: 52 3/4 × 40 1/2" (outside minus 2 × rail, calculated).
Offsets: from the OUTSIDE left end and the OUTSIDE bottom side of the curb to the opening's near edge. Openings are clear inside sizes.
Measure here: OUTSIDE of the curb rail with a tape; unit end not documented.

Lennox — VERIFIED
Part # RMF16-41
OUTSIDE 56 3/8 × 44 1/8" · Height 14 in · 2-5 T · legacy
Ref: x from the return end (left in top view): return E starts at inside of end rail, G=4 member, then supply F (sup_x = 1-13/16+24-3/8+4, derived); y from the top long side: return 20-1/2 deep to the optional field plenum angle (without it the return runs the full 40-1/2), supply 24-1/2 deep to the furnished support angle

TOP VIEW · LOOKING DOWN ON THE CURB · TO SCALE

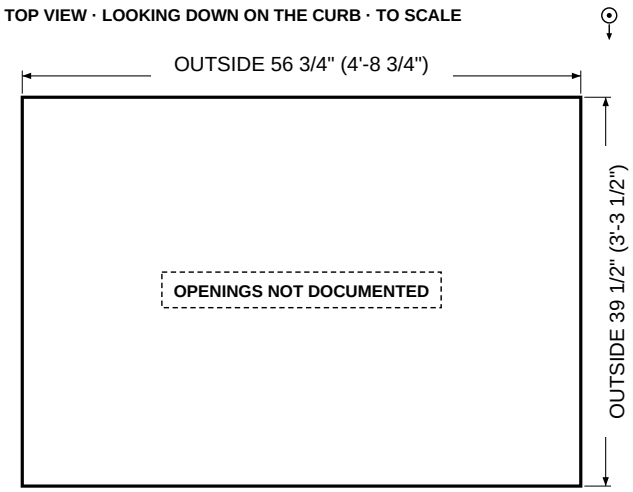

Rail width not documented, so the inside line is not drawn.
Measure here: OUTSIDE of the curb rail with a tape; unit end not documented.

Carrier/Bryant/ICP — UNVERIFIED
Part # 304851-301
OUTSIDE 56 3/4 × 39 1/2" · Tons 3 T · legacy

SOURCE EXCERPT (left: the cited page of the manufacturer or curb-maker document) beside our TOP VIEW drawing (right, to scale, looking down).
Openings are drawn only where their offsets are documented; offsets run from the OUTSIDE left end and OUTSIDE bottom side. Curb-maker sources are UNVERIFIED.

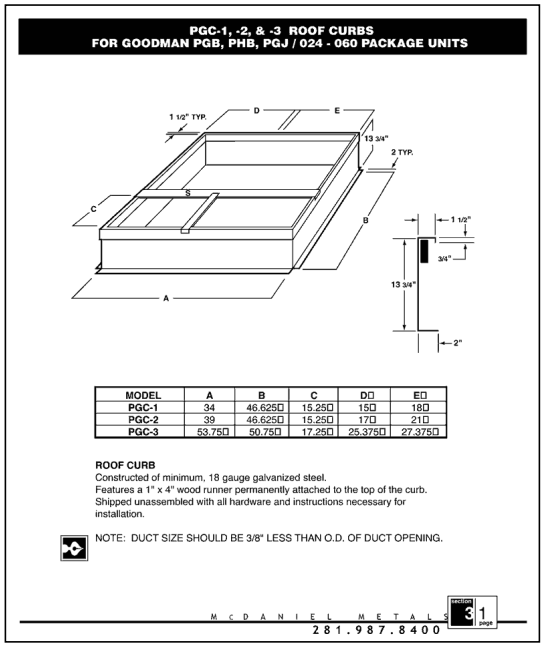

PGC-1, -2, & -3 ROOF CURBS
FOR GOODMAN PGB, PHB, PGJ / 024 - 060 PACKAGE UNITS

MODEL	A	B	C	D□	E□
PGC-1	34	46.625□	15.25□	15□	18□
PGC-2	39	46.625□	15.25□	17□	21□
PGC-3	53.75□	50.75□	17.25□	25.375□	27.375□

ROOF CURB
Constructed of minimum, 18 gauge galvanized steel.
Features a 1" x 4" wood runner permanently attached to the top of the curb.
Shipped unassembled with all hardware and instructions necessary for installation.

NOTE: DUCT SIZE SHOULD BE 3/8" LESS THAN O.D. OF DUCT OPENING.

M C D A N I E L M E T A L S
281.987.8400
SECTION 3 1 page

Curb-maker drawing (UNVERIFIED) · page 8 · https://documents.alpinehomeair.com/product/McDaniel%20Metals%20Spec%20Sheets.pdf

TOP VIEW · LOOKING DOWN ON THE CURB · TO SCALE

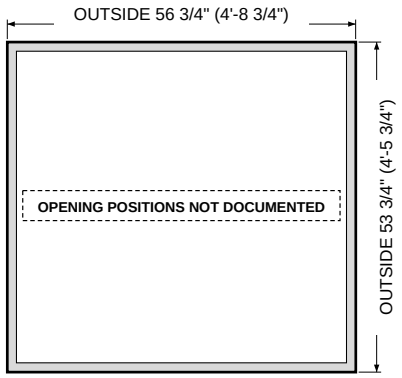

Grey band = curb rail, 1 1/2" wide. Inner line = INSIDE of rail: 53 3/4 × 50 3/4" (outside minus 2 × rail, calculated).
Opening sizes are in the list; their positions are not documented, so none are drawn.
Measure here: OUTSIDE of the curb rail with a tape; unit end not documented.

Daikin/Goodman/Amana — CALCULATED
Part # PGC-3
OUTSIDE 56 3/4 × 53 3/4" · Height 13.75 in · 3.5-5 T · legacy
Ref: sizes only: 17.25 (C) deep bay along the length, two openings 25.375 and 27.375 (D,E) across the width, ~1 in divider; supply vs return not labeled, offsets not dimensioned

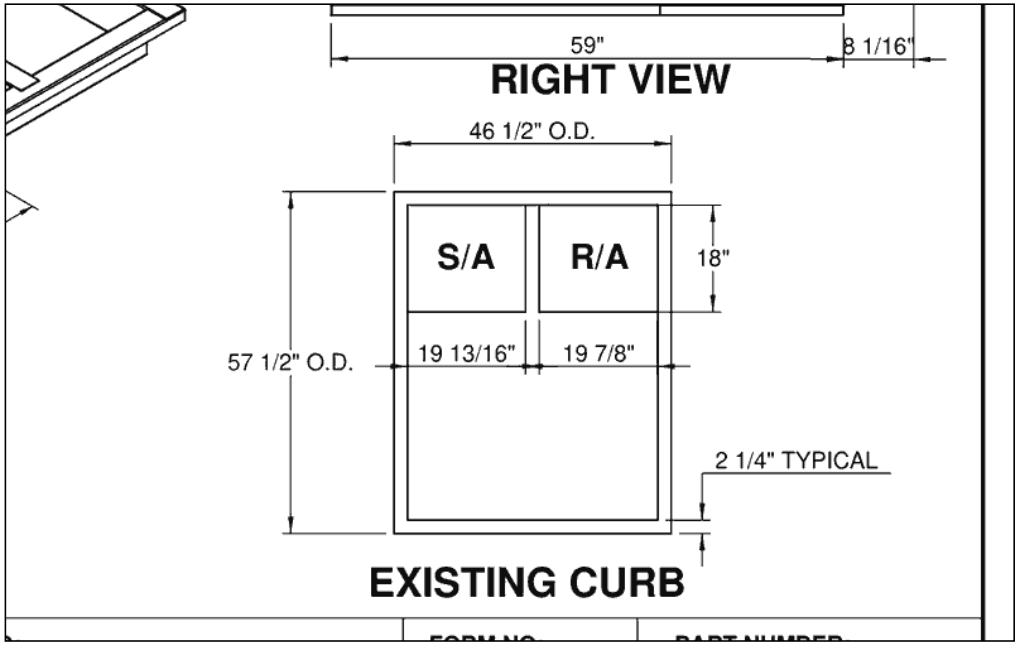

Curb-maker drawing (UNVERIFIED) · page 1 · https://www.proventusa.com/-/media/provent/catalog/pdf/york-curb-adapters/curb/sunlir

TOP VIEW · LOOKING DOWN ON THE CURB · TO SCALE

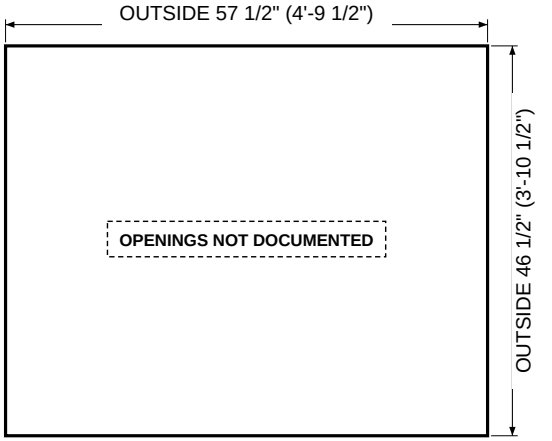

Rail width not documented, so the inside line is not drawn.
Measure here: OUTSIDE of the curb rail with a tape; unit end not documented.

Trane/American Standard — UNVERIFIED
Part # (factory curb part unknown)
OUTSIDE 57 1/2 × 46 1/2" · Tons 3-5, 4-5 T · legacy

SOURCE EXCERPT (left: the cited page of the manufacturer or curb-maker document) beside our TOP VIEW drawing (right, to scale, looking down).
Openings are drawn only where their offsets are documented; offsets run from the OUTSIDE left end and OUTSIDE bottom side. Curb-maker sources are UNVERIFIED.

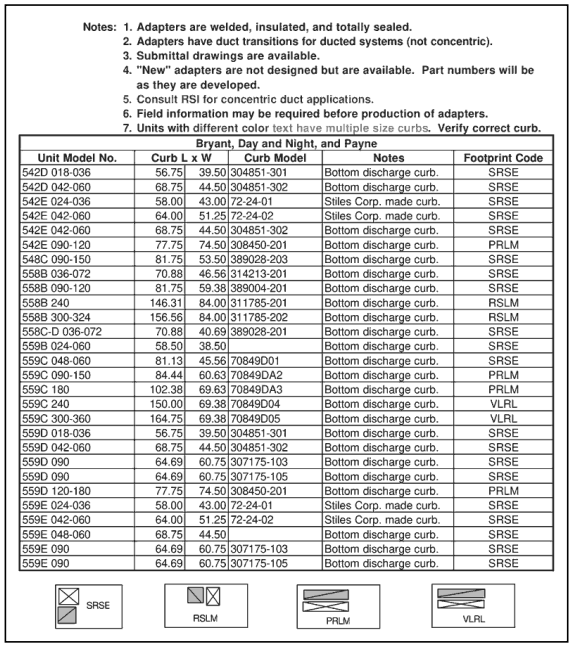

Notes: 1. Adapters are welded, insulated, and totally sealed.
2. Adapters have duct transitions for ducted systems (not concentric).
3. Submittal drawings are available.
4. "New" adapters are not designed but are available. Part numbers will be as they are developed.
5. Consult RSI for concentric duct applications.
6. Field information may be required before production of adapters.
7. Units with different color text have multiple size curbs. Verify correct curb.

Bryant, Day and Night, and Payne

Unit Model No.	Curb L	x W	Curb Model	Notes	Footprint Code
542D 018-036	56.75	39.50	304851-301	Bottom discharge curb.	SRSE
542D 042-060	68.75	44.50	304851-302	Bottom discharge curb.	SRSE
542E 024-036	58.00	43.00	72-24-01	Stiles Corp. made curb.	SRSE
542E 042-060	64.00	51.25	72-24-02	Stiles Corp. made curb.	SRSE
542E 042-060	68.75	44.50	304851-302	Bottom discharge curb.	SRSE
542E 090-120	77.75	74.50	308450-201	Bottom discharge curb.	PRLM
548C 090-150	81.75	53.50	389028-203	Bottom discharge curb.	SRSE
558B 036-072	70.88	46.56	314213-201	Bottom discharge curb.	SRSE
558B 090-120	81.75	59.38	389004-201	Bottom discharge curb.	SRSE
558B 240	146.31	84.00	311785-201	Bottom discharge curb.	RSLM
558B 300-324	156.56	84.00	311785-202	Bottom discharge curb.	RSLM
558C-D 036-072	70.88	40.69	389028-201	Bottom discharge curb.	SRSE
559B 024-060	58.50	38.50		Bottom discharge curb.	SRSE
559C 048-060	81.13	45.56	70849D01	Bottom discharge curb.	SRSE
559C 090-150	84.44	60.63	70849DA2	Bottom discharge curb.	PRLM
559C 180	102.38	69.63	70849DA3	Bottom discharge curb.	PRLM
559C 240	150.00	69.38	70849D04	Bottom discharge curb.	VLRL
559C 300-360	164.75	69.38	70849D05	Bottom discharge curb.	VLRL
559D 018-036	56.75	39.50	304851-301	Bottom discharge curb.	SRSE
559D 042-060	68.75	44.50	304851-302	Bottom discharge curb.	SRSE
559D 090	64.69	60.75	307175-103	Bottom discharge curb.	SRSE
559D 090	64.69	60.75	307175-105	Bottom discharge curb.	SRSE
559D 120-180	77.75	74.50	308450-201	Bottom discharge curb.	PRLM
559E 024-036	58.00	43.00	72-24-01	Stiles Corp. made curb.	SRSE
559E 042-060	64.00	51.25	72-24-02	Stiles Corp. made curb.	SRSE
559E 048-060	68.75	44.50		Bottom discharge curb.	SRSE
559E 090	64.69	60.75	307175-103	Bottom discharge curb.	SRSE
559E 090	64.69	60.75	307175-105	Bottom discharge curb.	SRSE

SRSE RSLM PRLM VLRL

Curb-maker drawing (UNVERIFIED) · page 1 · https://www.ruskinrooftopsystems.com/Portals/5/bdp_web_adapters.pdf

TOP VIEW · LOOKING DOWN ON THE CURB · TO SCALE

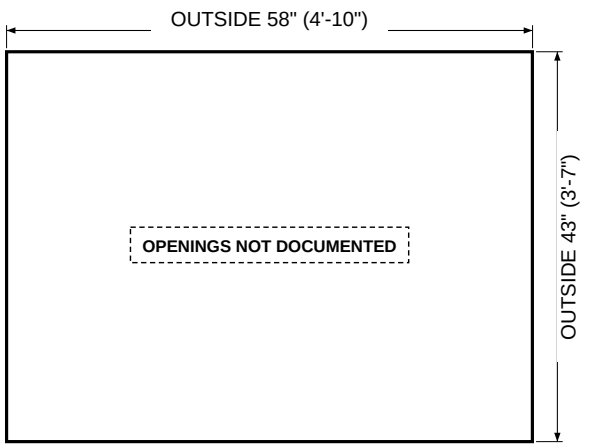

Rail width not documented, so the inside line is not drawn.
Measure here: OUTSIDE of the curb rail with a tape; unit end not documented.

Carrier/Bryant/ICP — UNVERIFIED
Part # Stiles Corp. curb (not factory) 72-24-01
OUTSIDE 58 × 43" · Tons 3 T · legacy

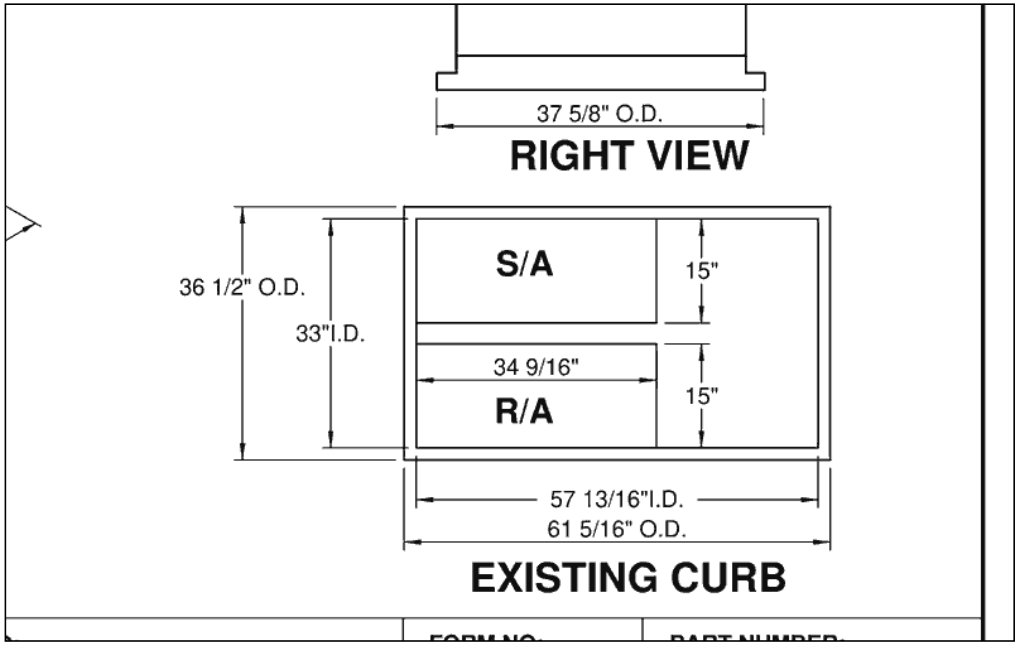

Curb-maker drawing (UNVERIFIED) · page 1 · https://www.proventusa.com/-/media/provent/catalog/pdf/york-curb-adapters/curb/sun

TOP VIEW · LOOKING DOWN ON THE CURB · TO SCALE

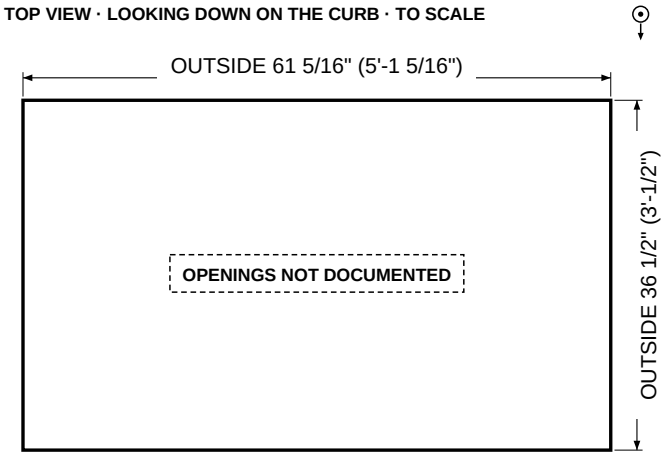

Rail width not documented, so the inside line is not drawn.
Measure here: OUTSIDE of the curb rail with a tape; unit end not documented.

Carrier/Bryant/ICP — UNVERIFIED
Part # factory curb no. not found (existing-curb size from ProVent CA-SUN3672-CAR04 / CA-LXL-CAR22)
OUTSIDE 61 5/16 × 36 1/2" · Tons 3-6 T · legacy

SOURCE EXCERPT (left: the cited page of the manufacturer or curb-maker document) beside our TOP VIEW drawing (right, to scale, looking down).
Openings are drawn only where their offsets are documented; offsets run from the OUTSIDE left end and OUTSIDE bottom side. Curb-maker sources are UNVERIFIED.

No source excerpt on file for this curb

TOP VIEW · LOOKING DOWN ON THE CURB · TO SCALE

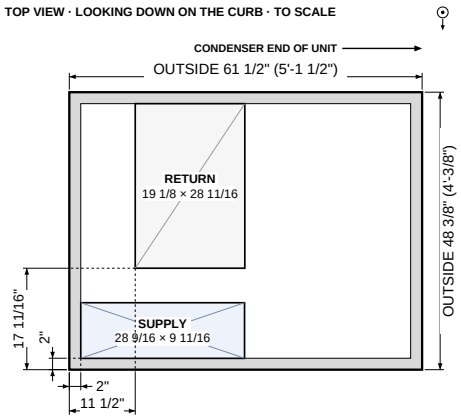

Grey band = curb rail, 2" wide. Inner line = INSIDE of rail: 57 1/2 × 44 3/8" (outside minus 2 × rail, calculated).
Offsets: from the OUTSIDE left end and the OUTSIDE bottom side of the curb to the opening's near edge. Openings are clear inside sizes.
Measure here: OUTSIDE of the curb rail with a tape.

Daikin/Goodman/Amana — CALCULATED
Part # Rebel standard roof curb – small cabinet (P/N not printed)
OUTSIDE 61 1/2 × 48 3/8" · Height 14, 24 in · 3-6 T · legacy
Ref: x from the return-air end (end away from the condenser overhang), y from the LEFT side; supply sits against the end and left rails; ret_x = 2.0 rail + 9.5, ret_y = 2.0 + 9.69 + 6.0 divider (derived; 9.69+6.0+28.69 = 44.38 inside closes)

Notes:
1. Adapters are welded, insulated, and totally sealed.
2. Adapters have duct transitions for ducted systems (not concentric).
3. Submittal drawings are available.
4. "New" adapters are not designed but are available. Part numbers will be as they are developed.
5. Consult RSI for concentric duct applications.
6. Field information may be required before production of adapters.
7. Units with different color text have multiple size curbs. Verify correct curb.

Bryant, Day and Night, and Payne

Unit Model No.	Curb L	x W	Curb Model	Notes	Footprint Code
542D 018-036	56.75	39.50	304851-301	Bottom discharge curb.	SRSE
542D 042-060	68.75	44.50	304851-302	Bottom discharge curb.	SRSE
542E 024-036	58.00	43.00	72-24-01	Stiles Corp. made curb.	SRSE
542E 042-060	64.00	51.25	72-24-02	Stiles Corp. made curb.	SRSE
542E 042-060	68.75	44.50	304851-302	Bottom discharge curb.	SRSE
542E 090-120	77.75	74.50	308450-201	Bottom discharge curb.	PRLM
548C 090-150	81.75	53.50	389028-203	Bottom discharge curb.	SRSE
558B 036-072	70.88	46.56	314213-201	Bottom discharge curb.	SRSE
558B 090-120	81.75	59.38	389004-201	Bottom discharge curb.	SRSE
558B 240	146.31	84.00	311785-201	Bottom discharge curb.	RSLM
558B 300-324	156.56	84.00	311785-202	Bottom discharge curb.	RSLM
558C-D 036-072	70.88	40.69	389028-201	Bottom discharge curb.	SRSE
559B 024-060	58.50	38.50		Bottom discharge curb.	SRSE
559C 048-060	81.13	45.56	70849D01	Bottom discharge curb.	SRSE
559C 090-150	84.44	60.63	70849DA2	Bottom discharge curb.	PRLM
559C 180	102.38	69.63	70849DA3	Bottom discharge curb.	PRLM
559C 240	150.00	69.38	70849D04	Bottom discharge curb.	VLRL
559C 300-360	164.75	69.38	70849D05	Bottom discharge curb.	VLRL
559D 018-036	56.75	39.50	304851-301	Bottom discharge curb.	SRSE
559D 042-060	68.75	44.50	304851-302	Bottom discharge curb.	SRSE
559D 090	64.69	60.75	307175-103	Bottom discharge curb.	SRSE
559D 090	64.69	60.75	307175-105	Bottom discharge curb.	SRSE
559D 120-180	77.75	74.50	308450-201	Bottom discharge curb.	PRLM
559E 024-036	58.00	43.00	72-24-01	Stiles Corp. made curb.	SRSE
559E 042-060	64.00	51.25	72-24-02	Stiles Corp. made curb.	SRSE
559E 048-060	68.75	44.50		Bottom discharge curb.	SRSE
559E 090	64.69	60.75	307175-103	Bottom discharge curb.	SRSE
559E 090	64.69	60.75	307175-105	Bottom discharge curb.	SRSE



Curb-maker drawing (UNVERIFIED) · page 1 · https://www.ruskinrooftopsystems.com/Portals/5/bdp_web_adapters.pdf

TOP VIEW · LOOKING DOWN ON THE CURB · TO SCALE

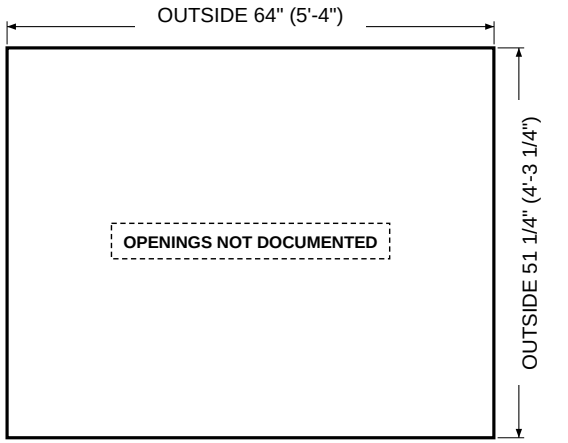

Rail width not documented, so the inside line is not drawn.
Measure here: OUTSIDE of the curb rail with a tape; unit end not documented.

Carrier/Bryant/ICP — UNVERIFIED
Part # Stiles Corp. curb (not factory) 72-24-02
OUTSIDE 64 × 51 1/4" · Tons 3.5-5 T · legacy

SOURCE EXCERPT (left: the cited page of the manufacturer or curb-maker document) beside our TOP VIEW drawing (right, to scale, looking down).
Openings are drawn only where their offsets are documented; offsets run from the OUTSIDE left end and OUTSIDE bottom side. Curb-maker sources are UNVERIFIED.

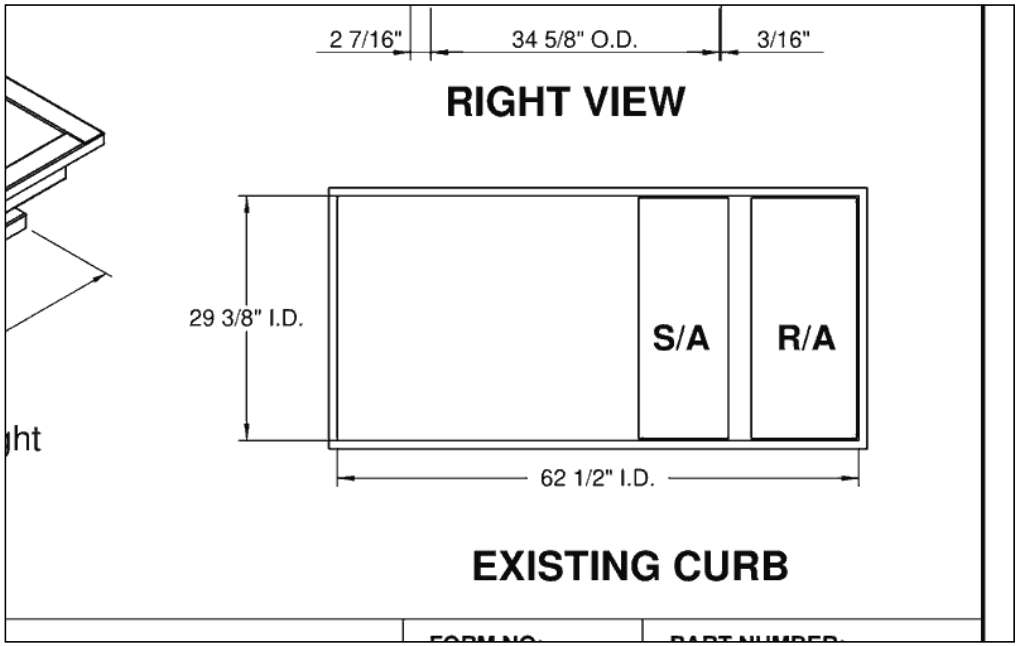

Curb-maker drawing (UNVERIFIED) · page 1 · https://www.proventusa.com/-/media/provent/catalog/pdf/york-curb-adapters/curb/su

TOP VIEW · LOOKING DOWN ON THE CURB · TO SCALE

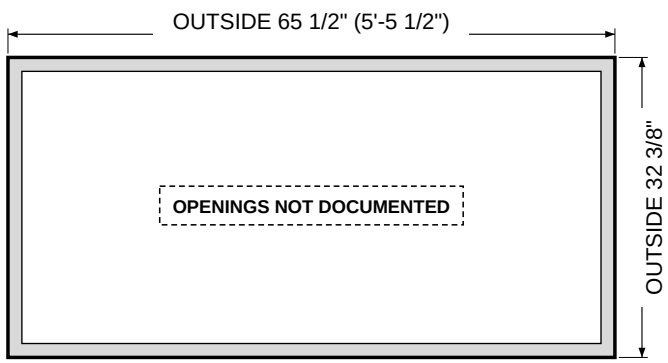

Grey band = curb rail, 1 1/2" wide. Inner line = INSIDE of rail: 62 1/2 × 29 3/8" (outside minus 2 × rail, calculated).
Measure here: OUTSIDE of the curb rail with a tape; unit end not documented.

Trane/American Standard — CALCULATED
Part # (factory curb part unknown)
OUTSIDE 65 1/2 × 32 3/8" · Tons 5 T · legacy
Ref: calc: printed existing-curb INSIDE 62.5 x 29.375 + 2 x 1-1/2 rail (rail as printed on ProVent TRN16)

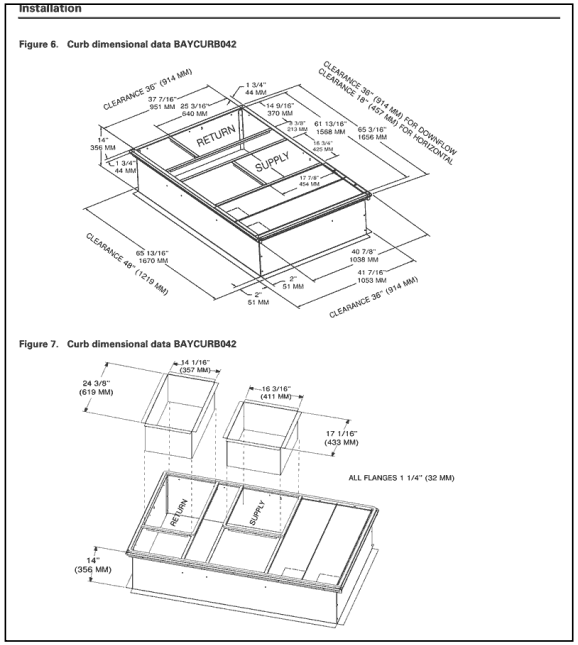

Manufacturer drawing · page 8 · https://elibrary.tranetechnologies.com/public/trane-history/Literature/Installation/ACC-SVN43N-EN_04242020

TOP VIEW · LOOKING DOWN ON THE CURB · TO SCALE

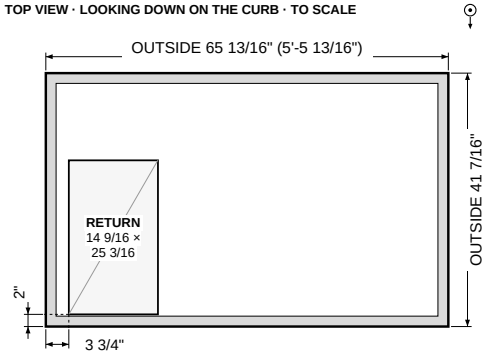

Grey band = curb rail, 1 11/16" wide. Inner line = INSIDE of rail: 62 7/16 × 38 1/16" (outside minus 2 × rail, calculated).
Offsets: from the OUTSIDE left end and the OUTSIDE bottom side of the curb to the opening's near edge. Openings are clear inside sizes.
Supply opening 16 3/4 × 17 7/8": size documented, position not documented (not drawn).
Measure here: OUTSIDE of the curb rail with a tape; unit end not documented.

Trane/American Standard — VERIFIED
Part # BAYCURB042A / BAYCURB042*
OUTSIDE 65 13/16 × 41 7/16" · Height 14 in · 3-5 T · legacy
Also OUTSIDE (2nd outline on drawing) 65 3/16 × 40 7/8"
Ref: offsets from the BASE outline (65-13/16 x 41-7/16, 2 in outside the inside faces); x from return end: 2.0 + 1-3/4 + 14-9/16 + 8-3/8 divider (derived); return y = 2.0 from the left side looking at the return end (25-3/16 dimensioned from that inside corner); supply y not dimensioned; rail_in = top rail (65-3/16-61-13/16)/2, derived

SOURCE EXCERPT (left: the cited page of the manufacturer or curb-maker document) beside our TOP VIEW drawing (right, to scale, looking down).
Openings are drawn only where their offsets are documented; offsets run from the OUTSIDE left end and OUTSIDE bottom side. Curb-maker sources are UNVERIFIED.

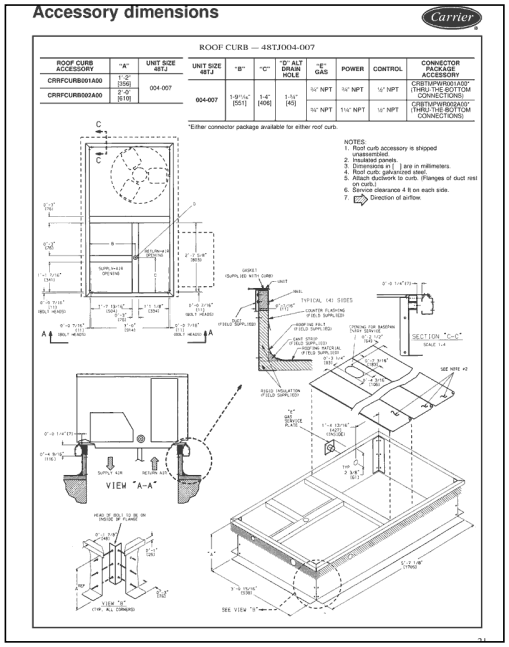
Accessory dimensions

Carrier

ROOF CURB — 48TJ004-007

ROOF CURB ACCESSORY	"A"	UNIT SIZE 48TJ
CRRFCURB001A00	1'-2" [356]	004-007
CRRFCURB002A00	2'-0" [610]	

UNIT SIZE 48TJ	"B"	"C"	"D" ALT DRAIN HOLE	"E" GAS	POWER	CONTROL	CONNECTOR PACKAGE ACCESSORY
004-007	1-9/16 [551]	1-6/7 [466]	1-7/8 [45]	½" NPT	¾" NPT	½" NPT	CRBTMPWR001A00 (THRU-THE-BOTTOM CONNECTIONS)
				¾" NPT	1¼" NPT	½" NPT	CRBTMPWR004A00 (THRU-THE-BOTTOM CONNECTIONS)

*Either connector package available for either roof curb.

NOTES:
1. Roof curb accessory is shipped unassembled.
2. Insulated panels.
3. Dimensions in [ ] are in millimeters.
4. Roof curb is galvanized steel.
5. Attach ductwork to curb. (Flanges of duct rest on curb.)
6. Service clearance 4 ft on each side.
7. Direction of airflow.

VIEW "A-A"

SECTION "C-C"

TYPICAL (4) SIDES

SEE VIEW "S"

21

Manufacturer drawing · page 21 · https://wizard.youngsupply.com/files/5-9530.pdf

TOP VIEW · LOOKING DOWN ON THE CURB · TO SCALE

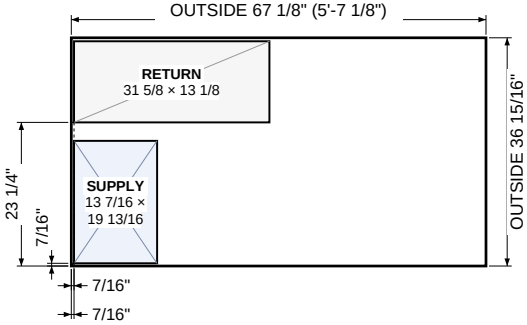

Rail width not documented, so the inside line is not drawn.
Offsets: from the OUTSIDE left end and the OUTSIDE bottom side of the curb to the opening's near edge. Openings are clear inside sizes.
Measure here: OUTSIDE of the curb rail with a tape; unit end not documented.

Carrier/Bryant/ICP — **VERIFIED**
Part # CRRFCURB001A00 (14 in) / CRRFCURB002A00 (24 in); older Carrier no. 50DJ900771 (50DJ007, 1990)
OUTSIDE 67 1/8 × 36 15/16" · Height 14 / 24 in · Tons 3-6 T · legacy
Also OUTSIDE (2nd outline on drawing) 70 3/4 × 40 1/2"
Ref: x from the opening end, y from the supply-side rail; 0.4375 = the 7/16 bolt-head allowance outside the rail line (printed); ret_y derived 0.4375+19.8125+3.0; rail width not dimensioned

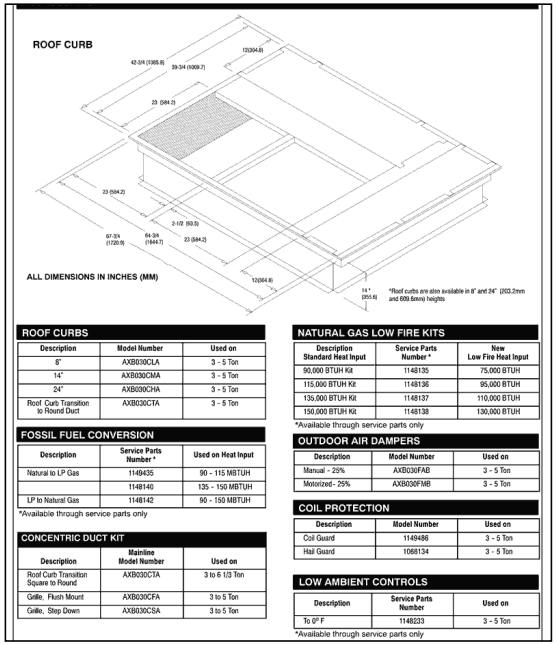
ROOF CURB

ALL DIMENSIONS IN INCHES (MM)

*Roof curbs are also available in 8" and 24" (203.2mm and 609.6mm) heights

ROOF CURBS

Description	Model Number	Used on
8"	AXB030CLA	3 - 5 Ton
14"	AXB030CMA	3 - 5 Ton
24"	AXB030CHA	3 - 5 Ton
Roof Curb Transition to Round Duct	AXB030CTA	3 - 5 Ton

FOSSIL FUEL CONVERSION

Description	Service Parts Number *	Used on Heat Input
Natural to LP Gas	1149435	90 - 115 MBTUH
	1148140	135 - 150 MBTUH
LP to Natural Gas	1148142	90 - 150 MBTUH

*Available through service parts only

CONCENTRIC DUCT KIT

Description	Mainline Model Number	Used on
Roof Curb Transition Square to Round	AXB030CTA	3 to 6 1/3 Ton
Grille, Flush Mount	AXB030CFA	3 to 5 Ton
Grille, Step Down	AXB030CSA	3 to 5 Ton

NATURAL GAS LOW FIRE KITS

Description Standard Heat Input	Service Parts Number *	New Low Fire Heat Input
90,000 BTUH Kit	1148135	75,000 BTUH
115,000 BTUH Kit	1148136	95,000 BTUH
135,000 BTUH Kit	1148137	110,000 BTUH
150,000 BTUH Kit	1148138	130,000 BTUH

*Available through service parts only

OUTDOOR AIR DAMPERS

Description	Model Number	Used on
Manual - 25%	AXB030FAB	3 - 5 Ton
Motorized - 25%	AXB030FMB	3 - 5 Ton

COIL PROTECTION

Description	Model Number	Used on
Coil Guard	1149486	3 - 5 Ton
Hail Guard	1068134	3 - 5 Ton

LOW AMBIENT CONTROLS

Description	Service Parts Number	Used on
To 0° F	1148233	3 - 5 Ton

*Available through service parts only

Manufacturer drawing · page 6 · http://icpindexing.toddsit.com/documents/086477/50911110104.pdf

TOP VIEW · LOOKING DOWN ON THE CURB · TO SCALE

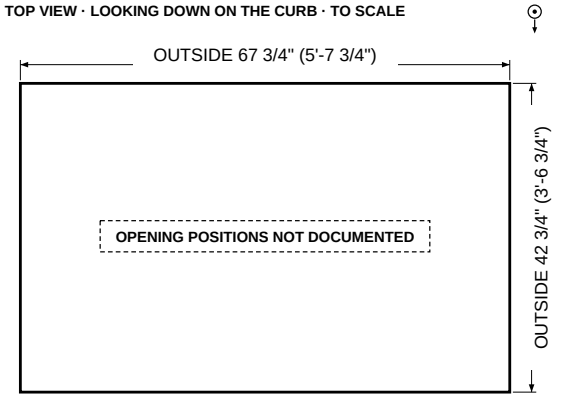

Rail width not documented, so the inside line is not drawn.
Supply opening 23 × 23": size documented, position not documented (not drawn).
Return opening 23 × 23": size documented, position not documented (not drawn).
Measure here: OUTSIDE of the curb rail with a tape; unit end not documented.

Carrier/Bryant/ICP — **VERIFIED**
Part # AXB030CLA (8 in) / AXB030CMA (14 in) / AXB030CHA (24 in)
OUTSIDE 67 3/4 × 42 3/4" · Height 8 / 14 / 24 in · Tons 3-5 T · legacy
Ref: openings not labelled supply/return; positions not taken (isometric drawing)

SOURCE EXCERPT (left: the cited page of the manufacturer or curb-maker document) beside our TOP VIEW drawing (right, to scale, looking down).
Openings are drawn only where their offsets are documented; offsets run from the OUTSIDE left end and OUTSIDE bottom side. Curb-maker sources are UNVERIFIED.

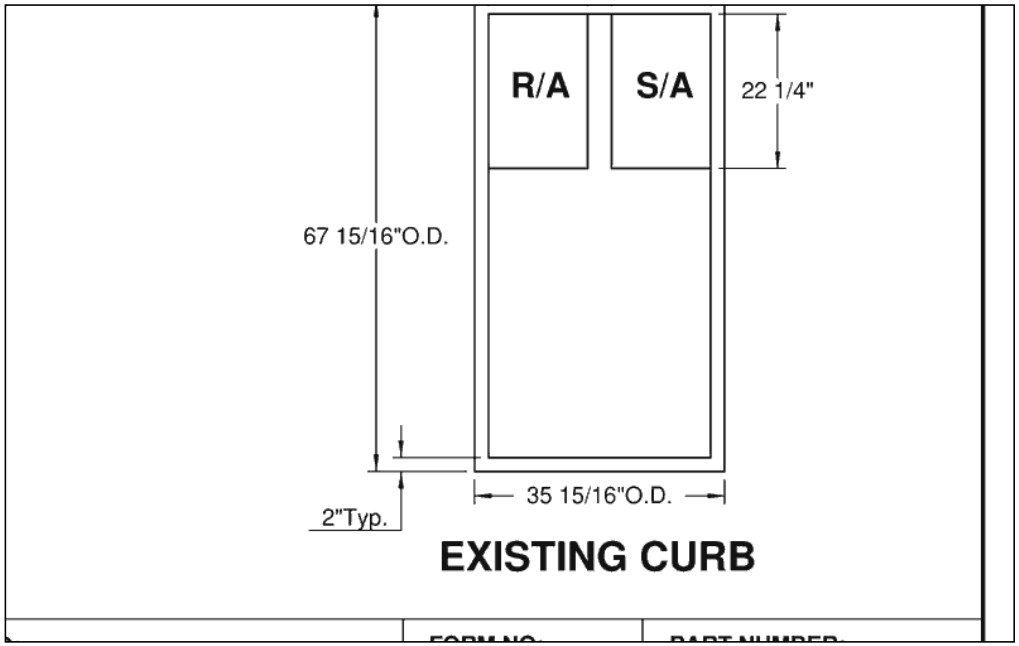

Curb-maker drawing (UNVERIFIED) · page 1 · https://www.proventusa.com/-/media/provent/catalog/pdf/york-curb-adapters/curb/

TOP VIEW · LOOKING DOWN ON THE CURB · TO SCALE

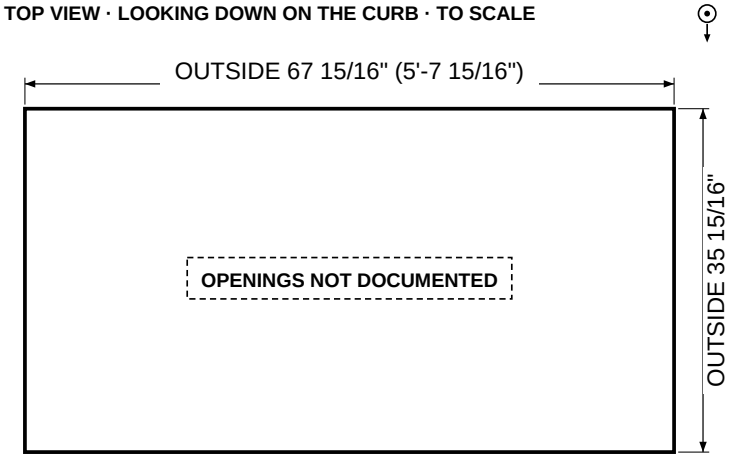

Rail width not documented, so the inside line is not drawn.
Measure here: OUTSIDE of the curb rail with a tape; unit end not documented.

Trane/American Standard UNVERIFIED
Part # (factory curb part unknown)
OUTSIDE 67 15/16 × 35 15/16" · Tons 5 T · legacy

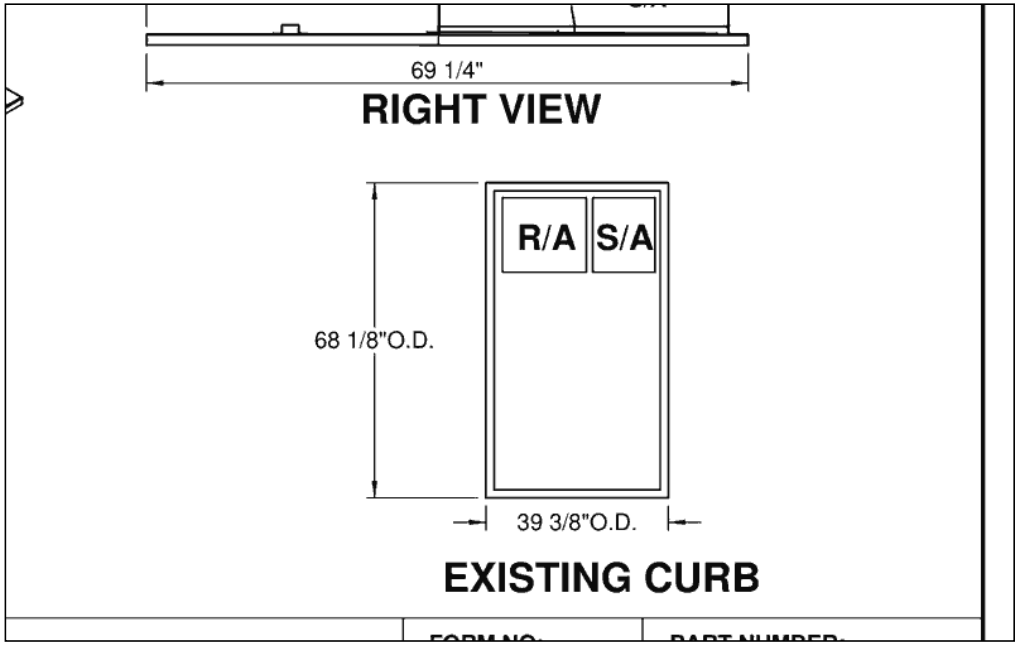

Curb-maker drawing (UNVERIFIED) · page 1 · https://www.proventusa.com/-/media/provent/catalog/pdf/york-curb-adapters/curb/su

TOP VIEW · LOOKING DOWN ON THE CURB · TO SCALE

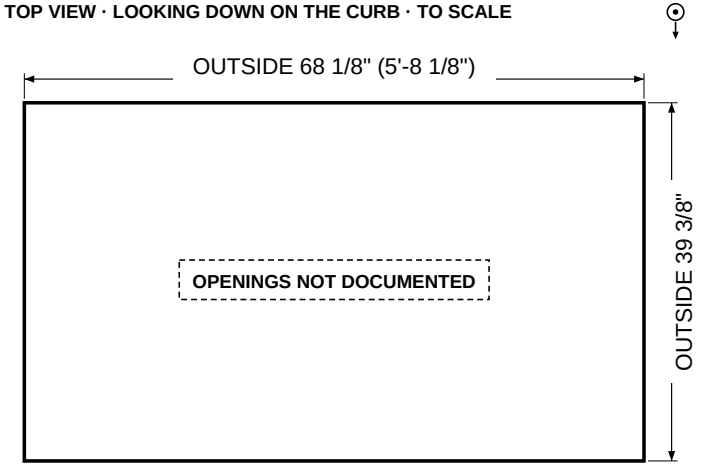

Rail width not documented, so the inside line is not drawn.
Measure here: OUTSIDE of the curb rail with a tape; unit end not documented.

Carrier/Bryant/ICP UNVERIFIED
Part # (factory curb part unknown)
OUTSIDE 68 1/8 × 39 3/8" · Height 14 in · Tons 5 T · legacy

SOURCE EXCERPT (left: the cited page of the manufacturer or curb-maker document) beside our TOP VIEW drawing (right, to scale, looking down).
Openings are drawn only where their offsets are documented; offsets run from the OUTSIDE left end and OUTSIDE bottom side. Curb-maker sources are UNVERIFIED.

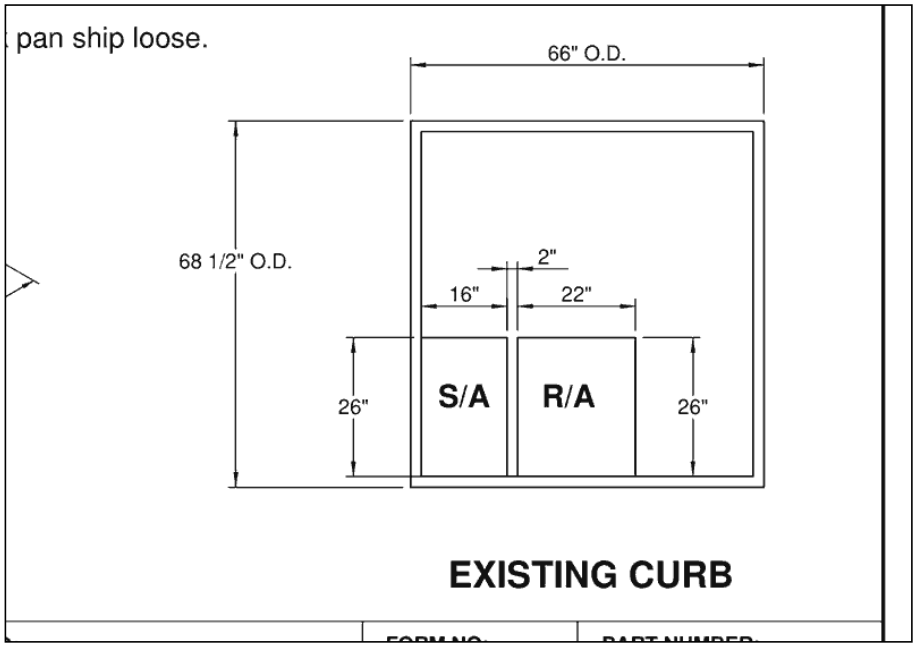

Curb-maker drawing (UNVERIFIED) · page 1 · https://www.proventusa.com/-/media/provent/catalog/pdf/york-curb-adapters/curb/sunline36t

TOP VIEW · LOOKING DOWN ON THE CURB · TO SCALE

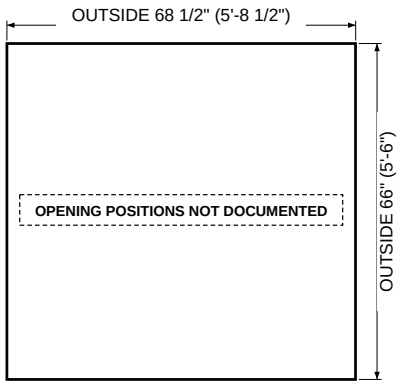

Rail width not documented, so the inside line is not drawn.
Supply opening 26 × 16": size documented, position not documented (not drawn).
Return opening 26 × 22": size documented, position not documented (not drawn).
Measure here: OUTSIDE of the curb rail with a tape; unit end not documented.

Carrier/Bryant/ICP — UNVERIFIED
Part # factory curb no. not found (existing-curb size from ProVent CA-SUN3672-CAR16)
OUTSIDE 68 1/2 × 66" · Tons 3-4 T · legacy
Ref: openings side by side at one end of the 68 1/2 length, 2 in apart; offsets from the edges not printed

Notes:
1. Adapters are welded, insulated, and totally sealed.
2. Adapters have duct transitions for ducted systems (not concentric).
3. Submittal drawings are available.
4. "New" adapters are not designed but are available. Part numbers will be as they are developed.
5. Consult RSI for concentric duct applications.
6. Field information may be required before production of adapters.
7. Units with different color text have multiple size curbs. Verify correct curb.

Bryant, Day and Night, and Payne

Unit Model No.	Curb L	x W	Curb Model	Notes	Footprint Code
542D 018-036	56.75	39.50	304851-301	Bottom discharge curb.	SRSE
542D 042-060	68.75	44.50	304851-302	Bottom discharge curb.	SRSE
542E 024-036	58.00	43.00	72-24-01	Stiles Corp. made curb.	SRSE
542E 042-060	64.00	51.25	72-24-02	Stiles Corp. made curb.	SRSE
542E 042-060	68.75	44.50	304851-302	Bottom discharge curb.	SRSE
542E 090-120	77.75	74.50	308450-201	Bottom discharge curb.	PRLM
548C 090-150	81.75	53.50	389028-203	Bottom discharge curb.	SRSE
558B 036-072	70.88	46.56	314213-201	Bottom discharge curb.	SRSE
558B 090-120	81.75	59.38	389004-201	Bottom discharge curb.	SRSE
558B 240	146.31	84.00	311785-201	Bottom discharge curb.	RSLM
558B 300-324	156.56	84.00	311785-202	Bottom discharge curb.	RSLM
558C-D 036-072	70.88	40.69	389028-201	Bottom discharge curb.	SRSE
559B 024-060	58.50	38.50		Bottom discharge curb.	SRSE
559C 048-060	81.13	45.56	70849D01	Bottom discharge curb.	SRSE
559C 090-150	84.44	60.63	70849DA2	Bottom discharge curb.	PRLM
559C 180	102.38	69.63	70849DA3	Bottom discharge curb.	PRLM
559C 240	150.00	69.38	70849D04	Bottom discharge curb.	VLRL
559C 300-360	164.75	69.38	70849D05	Bottom discharge curb.	VLRL
559D 018-036	56.75	39.50	304851-301	Bottom discharge curb.	SRSE
559D 042-060	68.75	44.50	304851-302	Bottom discharge curb.	SRSE
559D 090	64.69	60.75	307175-103	Bottom discharge curb.	SRSE
559D 090	64.69	60.75	307175-105	Bottom discharge curb.	SRSE
559D 120-180	77.75	74.50	308450-201	Bottom discharge curb.	PRLM
559E 024-036	58.00	43.00	72-24-01	Stiles Corp. made curb.	SRSE
559E 042-060	64.00	51.25	72-24-02	Stiles Corp. made curb.	SRSE
559E 048-060	68.75	44.50		Bottom discharge curb.	SRSE
559E 090	64.69	60.75	307175-103	Bottom discharge curb.	SRSE
559E 090	64.69	60.75	307175-105	Bottom discharge curb.	SRSE



Curb-maker drawing (UNVERIFIED) · page 1 · https://www.ruskinrooftopsystems.com/Portals/5/bdp_web_adapters.pdf

TOP VIEW · LOOKING DOWN ON THE CURB · TO SCALE

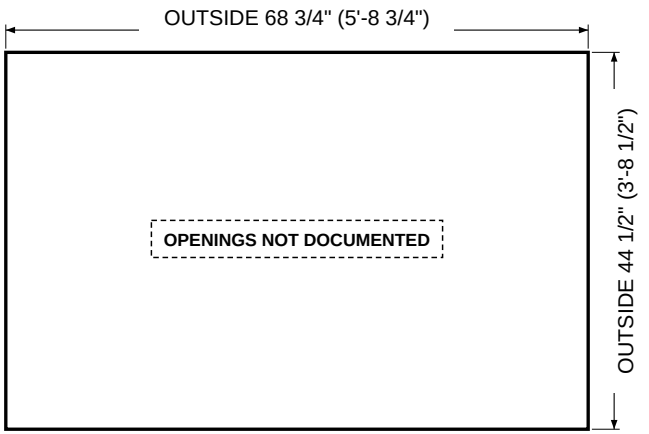

Rail width not documented, so the inside line is not drawn.
Measure here: OUTSIDE of the curb rail with a tape; unit end not documented.

Carrier/Bryant/ICP — UNVERIFIED
Part # 304851-302
OUTSIDE 68 3/4 × 44 1/2" · Tons 3.5-5 T · legacy

SOURCE EXCERPT (left: the cited page of the manufacturer or curb-maker document) beside our TOP VIEW drawing (right, to scale, looking down).
Openings are drawn only where their offsets are documented; offsets run from the OUTSIDE left end and OUTSIDE bottom side. Curb-maker sources are UNVERIFIED.

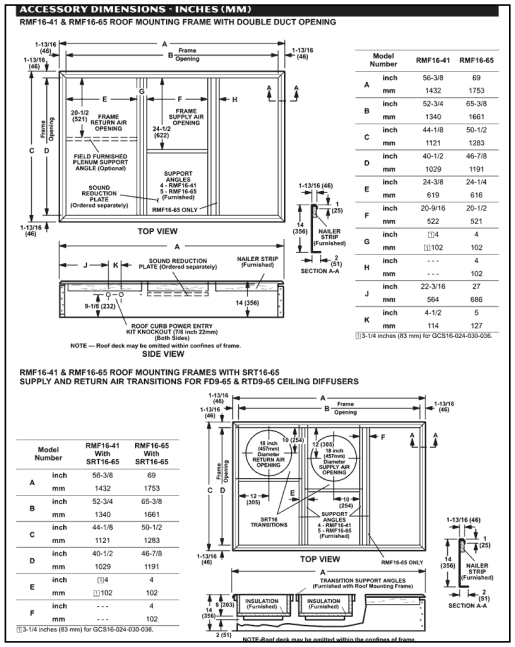

Model Number		RMF16-41	RMF16-65
A	inch	56-3/8	69
	mm	1432	1753
B	inch	52-3/4	65-3/8
	mm	1340	1661
C	inch	44-1/8	50-1/2
	mm	1121	1283
D	inch	40-1/2	46-7/8
	mm	1029	1191
E	inch	24-3/8	24-1/4
	mm	619	616
F	inch	20-9/16	20-1/2
	mm	522	521
G	inch	□4	4
	mm	□102	102
H	inch	- - -	4
	mm	- - -	102
J	inch	22-3/16	27
	mm	564	686
K	inch	4-1/2	5
	mm	114	127

□3-1/4 inches (83 mm) for GCS16-024-030-036.

Model Number		RMF16-41 With SRT16-65	RMF16-65 With SRT16-65
A	inch	56-3/8	69
	mm	1432	1753
B	inch	52-3/4	65-3/8
	mm	1340	1661
C	inch	44-1/8	50-1/2
	mm	1121	1283
D	inch	40-1/2	46-7/8
	mm	1029	1191
E	inch	□4	4
	mm	□102	102
F	inch	- - -	4
	mm	- - -	102

□3-1/4 inches (83 mm) for GCS16-024-030-036.

Manufacturer drawing · page 25 · https://tech.lennoxintl.com/c03e7o14l/viu12ch2uv/ehb_gcs16_gcs20sm_0209.pdf

TOP VIEW · LOOKING DOWN ON THE CURB · TO SCALE

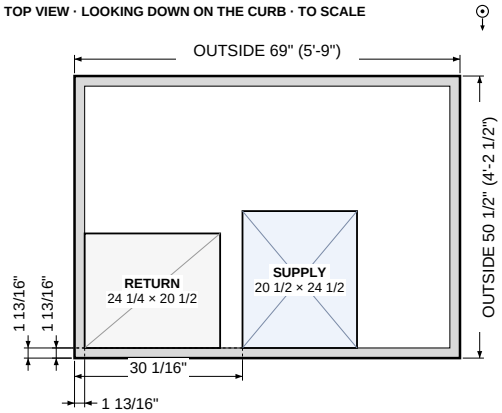

Grey band = curb rail, 1 13/16" wide. Inner line = INSIDE of rail: 65 3/8 × 46 7/8" (outside minus 2 × rail, calculated).
Offsets: from the OUTSIDE left end and the OUTSIDE bottom side of the curb to the opening's near edge. Openings are clear inside sizes.
Measure here: OUTSIDE of the curb rail with a tape; unit end not documented.

Lennox **VERIFIED**
Part # RMF16-65
OUTSIDE 69 × 50 1/2" · Height 14 in · 3-5 T · legacy
Ref: same top view as RMF16-41: return E from inside of end rail, G=4, supply F (derived 1-13/16+24-1/4+4); H=4 is an extra member past the supply on RMF16-65 only; return 20-1/2 deep to optional plenum angle, supply 24-1/2 deep to support angle, both from the top long side

Notes:
1. Adapters are welded, insulated, and totally sealed.
2. Adapters have duct transitions for ducted systems (not concentric).
3. Submittal drawings are available.
4. "New" adapters are not designed but are available. Part numbers will be as they are developed.
5. Consult RSI for concentric duct applications.
6. Field information may be required before production of adapters.
7. Units with different color text have multiple size curbs. Verify correct curb.

Bryant, Day and Night, and Payne

Unit Model No.	Curb L	x W	Curb Model	Notes	Footprint Code
579C 048-060	81.13	45.56	70849D01	Bottom discharge curb.	RSLR
579C 090-150	84.44	60.63	70849DA2	Bottom discharge curb.	PRLM
579C 180	102.38	69.63	70849DA3	Bottom discharge curb.	PRLM
579C 240	150.00	69.38	70849D04	Bottom discharge curb.	VLRL
579C 300-360	164.75	69.38	70849D05	Bottom discharge curb.	VLRL
579D 036-060	69.13	36.50	309427-101	Bottom discharge curb.	SERL
579D 090	80.56	60.75	307175-102	Bottom discharge curb.	SERL
579D 120-180	77.75	74.50	308450-201	Bottom discharge curb.	PRLM
579E 240-300	77.75	70.56	50PQ900221	Bottom discharge curb.	PRLM
579E-G048125-060	70.50	62.50	304851-304	Bottom discharge curb.	SRSE
580B 036-072	70.88	46.56	314213-201	Bottom discharge curb.	SRSE
580B 090-120	81.75	59.38	389004-201	Bottom discharge curb.	SRSE
580C-D 036-072	70.88	40.69	389028-201	Bottom discharge curb.	SRSE
585A 018-024	54.50	43.75	301585-301	Bottom discharge curb.	SRSE
585A 024-036	64.50	43.75	301585-302	Bottom discharge curb.	SRSE
585A 048-060	70.50	57.75	301585-303	Bottom discharge curb.	SRSE
585A 048-060	70.50	66.00	301585-304	Bottom discharge curb.	SRSE
585C 018050-036075	64.00	51.25	72-24-02	Stiles Corp. made curb.	SRSE
585C 036125-060150	77.00	51.25	72-24-03	Stiles Corp. made curb.	SRSE
585C 090	90.00	55.00	DPPC-008DG	Stiles Corp. made curb.	RDSL
585C 090-150	81.75	53.50	389028-203	Bottom discharge curb.	SRSE
585E 090	80.56	60.75	307175-102	Bottom discharge curb.	SERL
585E-G 018-036075	59.50	50.50	304851-303	Bottom discharge curb.	SRSE
585E-G048125-060	70.50	62.50	304851-304	Bottom discharge curb.	SRSE

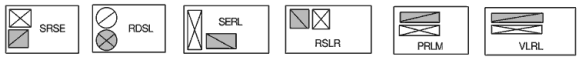

Curb-maker drawing (UNVERIFIED) · page 2 · https://www.ruskinrooftopsystems.com/Portals/5/bdp_web_adapters.pdf

TOP VIEW · LOOKING DOWN ON THE CURB · TO SCALE

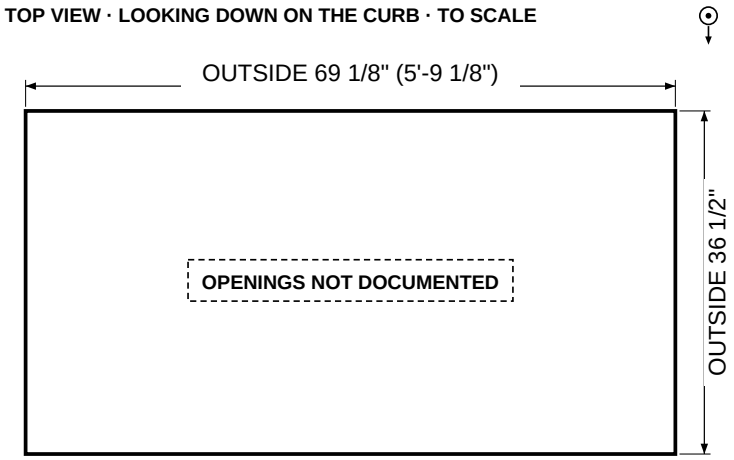

Rail width not documented, so the inside line is not drawn.
Measure here: OUTSIDE of the curb rail with a tape; unit end not documented.

Carrier/Bryant/ICP **UNVERIFIED**
Part # 309427-101
OUTSIDE 69 1/8 × 36 1/2" · Tons 3-5 T · legacy

SOURCE EXCERPT (left: the cited page of the manufacturer or curb-maker document) beside our TOP VIEW drawing (right, to scale, looking down).
Openings are drawn only where their offsets are documented; offsets run from the OUTSIDE left end and OUTSIDE bottom side. Curb-maker sources are UNVERIFIED.

No source excerpt on file for this curb

TOP VIEW · LOOKING DOWN ON THE CURB · TO SCALE

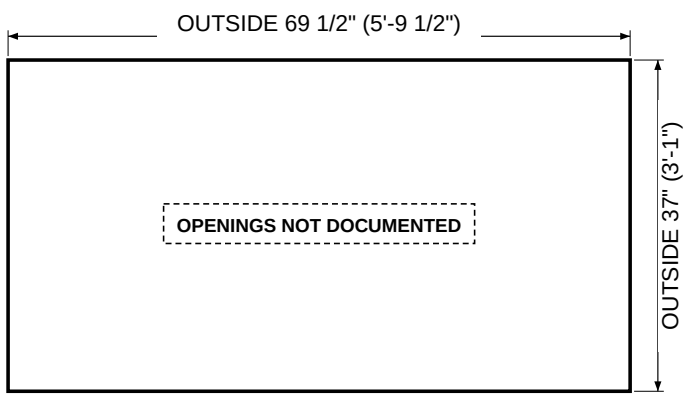

Rail width not documented, so the inside line is not drawn.
Measure here: OUTSIDE of the curb rail with a tape; unit end not documented.

Carrier/Bryant/ICP **UNVERIFIED**
Part # 48HD/48LD 004-007 accessory curb (factory part # not found)
OUTSIDE 69 1/2 × 37" · Tons 3-5, 3-6 T · legacy

Notes:
1. **Adapters are welded, insulated, and totally sealed.**
2. **Adapters have duct transitions for ducted systems (not concentric).**
3. **Submittal drawings are available.**
4. **"New" adapters are not designed but are available. Part numbers will be as they are developed.**
5. **Consult RSI for concentric duct applications.**
6. **Field information may be required before production of adapters.**
7. **Units with different color text have multiple size curbs. Verify correct curb.**

Bryant, Day and Night, and Payne					
Unit Model No.	Curb L	x W	Curb Model	Notes	Footprint Code
579C 048-060	81.13	45.56	70849D01	Bottom discharge curb.	RSLR
579C 090-150	84.44	60.63	70849DA2	Bottom discharge curb.	PRLM
579C 180	102.38	69.63	70849DA3	Bottom discharge curb.	PRLM
579C 240	150.00	69.38	70849D04	Bottom discharge curb.	VLRL
579C 300-360	164.75	69.38	70849D05	Bottom discharge curb.	VLRL
579D 036-060	69.13	36.50	309427-101	Bottom discharge curb.	SERL
579D 090	80.56	60.75	307175-102	Bottom discharge curb.	SERL
579D 120-180	77.75	74.50	308450-201	Bottom discharge curb.	PRLM
579E 240-300	77.75	70.56	50PQ900221	Bottom discharge curb.	PRLM
579E-G048125-060	70.50	62.50	304851-304	Bottom discharge curb.	SRSE
580B 036-072	70.88	46.56	314213-201	Bottom discharge curb.	SRSE
580B 090-120	81.75	59.38	389004-201	Bottom discharge curb.	SRSE
580C-D 036-072	70.88	40.69	389028-201	Bottom discharge curb.	SRSE
585A 018-024	54.50	43.75	301585-301	Bottom discharge curb.	SRSE
585A 024-036	64.50	43.75	301585-302	Bottom discharge curb.	SRSE
585A 048-060	70.50	57.75	301585-303	Bottom discharge curb.	SRSE
585A 048-060	70.50	66.00	301585-304	Bottom discharge curb.	SRSE
585C 018050-036075	64.00	51.25	72-24-02	Stiles Corp. made curb.	SRSE
585C 036125-060150	77.00	51.25	72-24-03	Stiles Corp. made curb.	SRSE
585C 090	90.00	55.00	DPPC-008DG	Stiles Corp. made curb.	RDSL
585C 090-150	81.75	53.50	389028-203	Bottom discharge curb.	SRSE
585E 090	80.56	60.75	307175-102	Bottom discharge curb.	SERL
585E-G 018-036075	59.50	50.50	304851-303	Bottom discharge curb.	SRSE
585E-G048125-060	70.50	62.50	304851-304	Bottom discharge curb.	SRSE

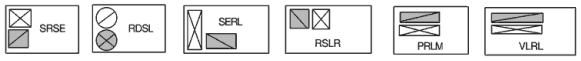

Curb-maker drawing (UNVERIFIED) · page 2 · https://www.ruskinrooftopsystems.com/Portals/5/bdp_web_adapters.pdf

TOP VIEW · LOOKING DOWN ON THE CURB · TO SCALE

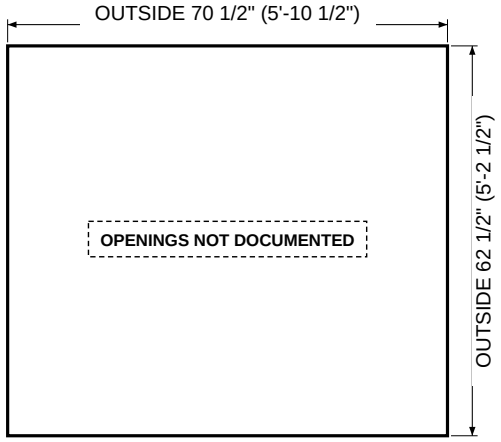

Rail width not documented, so the inside line is not drawn.
Measure here: OUTSIDE of the curb rail with a tape; unit end not documented.

Carrier/Bryant/ICP **UNVERIFIED**
Part # 304851-304
OUTSIDE 70 1/2 × 62 1/2" · Tons 4-5 T · legacy

SOURCE EXCERPT (left: the cited page of the manufacturer or curb-maker document) beside our TOP VIEW drawing (right, to scale, looking down).
Openings are drawn only where their offsets are documented; offsets run from the OUTSIDE left end and OUTSIDE bottom side. Curb-maker sources are UNVERIFIED.

Notes: 1. Adapters are welded, insulated, and totally sealed.
2. Adapters have duct transitions for ducted systems (not concentric).
3. Submittal drawings are available.
4. "New" adapters are not designed but are available. Part numbers will be as they are developed.
5. Consult RSI for concentric duct applications.
6. Field information may be required before production of adapters.
7. Units with different color text have multiple size curbs. Verify correct curb.

Bryant, Day and Night, and Payne

Unit Model No.	Curb L	x W	Curb Model	Notes	Footprint Code
542D 018-036	56.75	39.50	304851-301	Bottom discharge curb.	SRSE
542D 042-060	68.75	44.50	304851-302	Bottom discharge curb.	SRSE
542E 024-036	58.00	43.00	72-24-01	Stiles Corp. made curb.	SRSE
542E 042-060	64.00	51.25	72-24-02	Stiles Corp. made curb.	SRSE
542E 042-060	68.75	44.50	304851-302	Bottom discharge curb.	SRSE
542E 090-120	77.75	74.50	308450-201	Bottom discharge curb.	PRLM
548C 090-150	81.75	53.50	389028-203	Bottom discharge curb.	SRSE
558B 036-072	70.88	46.56	314213-201	Bottom discharge curb.	SRSE
558B 090-120	81.75	59.38	389004-201	Bottom discharge curb.	SRSE
558B 240	146.31	84.00	311785-201	Bottom discharge curb.	RSLM
558B 300-324	156.56	84.00	311785-202	Bottom discharge curb.	RSLM
558C-D 036-072	70.88	40.69	389028-201	Bottom discharge curb.	SRSE
559B 024-060	58.50	38.50		Bottom discharge curb.	SRSE
559C 048-060	81.13	45.56	70849D01	Bottom discharge curb.	SRSE
559C 090-150	84.44	60.63	70849DA2	Bottom discharge curb.	PRLM
559C 180	102.38	69.63	70849DA3	Bottom discharge curb.	PRLM
559C 240	150.00	69.38	70849D04	Bottom discharge curb.	VLRL
559C 300-360	164.75	69.38	70849D05	Bottom discharge curb.	VLRL
559D 018-036	56.75	39.50	304851-301	Bottom discharge curb.	SRSE
559D 042-060	68.75	44.50	304851-302	Bottom discharge curb.	SRSE
559D 090	64.69	60.75	307175-103	Bottom discharge curb.	SRSE
559D 090	64.69	60.75	307175-105	Bottom discharge curb.	SRSE
559D 120-180	77.75	74.50	308450-201	Bottom discharge curb.	PRLM
559E 024-036	58.00	43.00	72-24-01	Stiles Corp. made curb.	SRSE
559E 042-060	64.00	51.25	72-24-02	Stiles Corp. made curb.	SRSE
559E 048-060	68.75	44.50		Bottom discharge curb.	SRSE
559E 090	64.69	60.75	307175-103	Bottom discharge curb.	SRSE
559E 090	64.69	60.75	307175-105	Bottom discharge curb.	SRSE

SRSE RSLM PRLM VLRL

Curb-maker drawing (UNVERIFIED) · page 1 · https://www.ruskinrooftopsystems.com/Portals/5/bdp_web_adapters.pdf

TOP VIEW · LOOKING DOWN ON THE CURB · TO SCALE

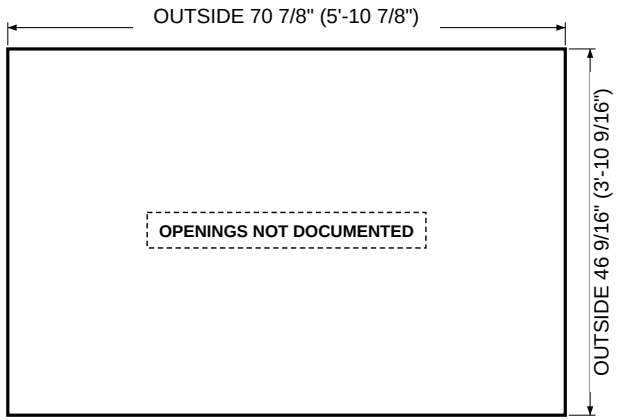

Rail width not documented, so the inside line is not drawn.
Measure here: OUTSIDE of the curb rail with a tape; unit end not documented.

Carrier/Bryant/ICP — UNVERIFIED
Part # 314213-201
OUTSIDE 70 7/8 × 46 9/16" · Height 14 / 24 in · Tons 3-5, 3-6 T · legacy

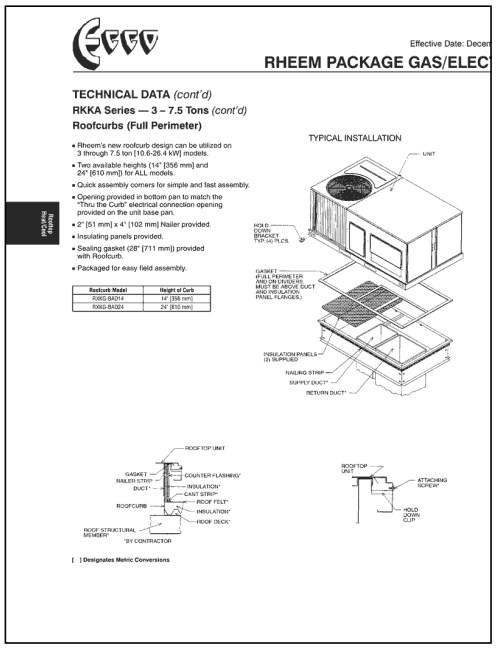
ECCO

Effective Date: Decem

RHEEM PACKAGE GAS/ELEC

TECHNICAL DATA *(cont'd)*
RKKA Series — 3 – 7.5 Tons *(cont'd)*
Roofcurbs (Full Perimeter)

- Rheem's new roofcurb design can be utilized on 3 through 7.5 ton [10.6-26.4 kW] models.
- Two available heights (14" [356 mm] and 24" [610 mm]) for ALL models.
- Quick assembly corners for simple and fast assembly.
- Opening provided in bottom pan to match the "Thru the Curb" electrical connection opening provided on the unit base pan.
- 2" [51 mm] x 4" [102 mm] Nailer provided.
- Insulating panels provided.
- Sealing gasket (28" [711 mm]) provided with Roofcurb.
- Packaged for easy field assembly.

Roofcurb Model	Height of Curb
RXKG-BAD14	14" [356 mm]
RXKG-BAD24	24" [610 mm]

TYPICAL INSTALLATION

UNIT
HOLD-DOWN BRACKET TYP (4) PLCS.
GASKET (FULL PERIMETER MOUNTING FLANGE, SUPPLY DUCT AND RETURN DUCT OPENINGS)
INSULATION PANELS (2) SUPPLIED
NAILING STRIP
SUPPLY DUCT*
RETURN DUCT*

ROOFTOP UNIT
GASKET
NAILER STRIP*
DUCT*
COUNTER FLASHING*
INSULATION*
CANT STRIP*
ROOF FELT*
ROOFCURB
INSULATION*
ROOF DECK*
ROOF STRUCTURAL MEMBER*
*BY CONTRACTOR

ROOFTOP UNIT
ATTACHING SCREW*
HOLD DOWN CLIP*

[ ] Designates Metric Conversions

Manufacturer drawing · page 32 · http://www.proairedesign.com/Catalog/Rheem_RKKA.pdf

TOP VIEW · LOOKING DOWN ON THE CURB · TO SCALE

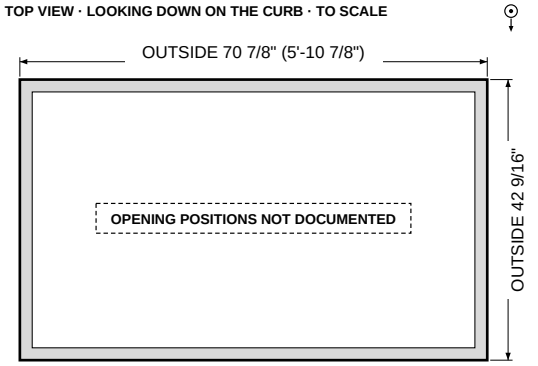

Grey band = curb rail, 1 7/8" wide. Inner line = INSIDE of rail: 67 1/8 × 38 13/16" (outside minus 2 × rail, calculated).
Supply opening 13 5/8 × 20 5/16": size documented, position not documented (not drawn).
Return opening 22 × 20 5/16": size documented, position not documented (not drawn).
Measure here: OUTSIDE of the curb rail with a tape; unit end not documented.

Rheem/Ruud — VERIFIED
Part # RXKG-BAD14 / RXKG-BAD24
OUTSIDE 70 7/8 × 42 9/16" · Height 14 / 24 in · 3-7.5 T · legacy
Ref: sizes only, from ECCO p33 drawing (rail 1-7/8 TYP printed; band 20-9/32, return 22 (27-1/2 stretch), supply 13-5/8, supply far edge 37-7/8 / 43-3/8 from the end); x offsets not closed exactly on this drawing — if needed use the RMICRB20 layout of the same 71x42-5/8 footprint (ret_x 1.875, sup_x 26.0)

SOURCE EXCERPT (left: the cited page of the manufacturer or curb-maker document) beside our TOP VIEW drawing (right, to scale, looking down).
Openings are drawn only where their offsets are documented; offsets run from the OUTSIDE left end and OUTSIDE bottom side. Curb-maker sources are UNVERIFIED.

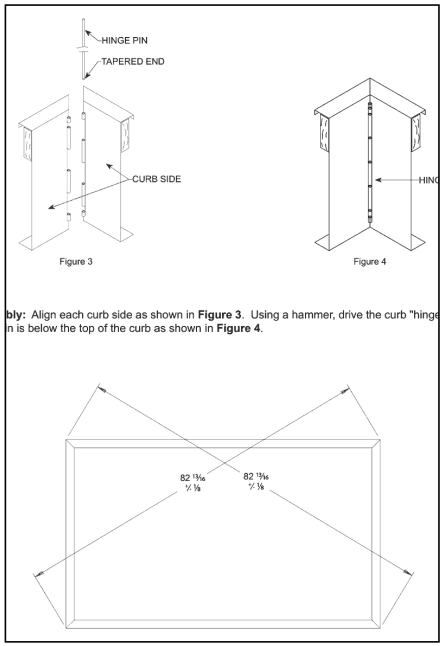

Curb-maker drawing (UNVERIFIED) · page 2 · https://www.insco.com/ASSETS/DOCUMENTS/ITEMS/EN/RRS_60_201_2014_Installation_Sheet.pd

TOP VIEW · LOOKING DOWN ON THE CURB · TO SCALE

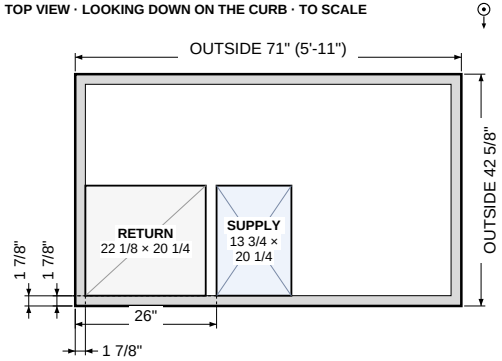

Grey band = curb rail, 1 7/8" wide. Inner line = INSIDE of rail: 67 1/4 × 38 7/8" (outside minus 2 × rail, calculated).
Offsets: from the OUTSIDE left end and the OUTSIDE bottom side of the curb to the opening's near edge. Openings are clear inside sizes.
Measure here: OUTSIDE of the curb rail with a tape; unit end not documented.

Rheem/Ruud VERIFIED
Part # RXKG series (Micrometl 60-201-2008 8in / 60-201-2018 18in)
OUTSIDE 71 × 42 5/8" · Height 8 / 18 in · 3-7.5 T · legacy
Ref: standard 76-1/4 cabinet layout; x from the return end, y from the long side the openings sit against; RMICRB20 top view: A 22-1/8 (return bay), 2 support, supply 13-3/4, B 37-7/8 = 22-1/8+2+13-3/4 (closes); band 20-1/4 + C support 2 + pan band 16-5/8 + 2 rails = 42-5/8 gives rail 1-7/8 (derived, assumes C = 2 like D). Stretch 82-1/4 cabinet: ret_len 27.625, sup_x 31.5 (B 43-3/8). Bays are clear openings; ducts are 1/2 smaller (21-5/8 / 13-1/4 x 19-3/4)

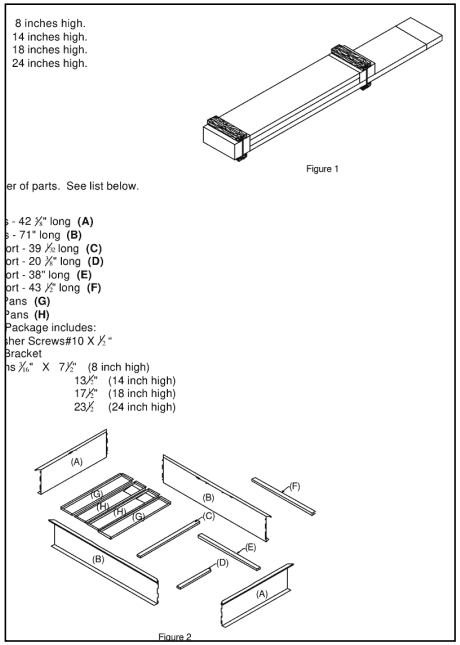

Manufacturer drawing · page 1 · http://pts.rheem.com/docstore/webdocs/Public/ServicePublic/Trouble2a/pdfs/RSI/RXKG.pdf

TOP VIEW · LOOKING DOWN ON THE CURB · TO SCALE

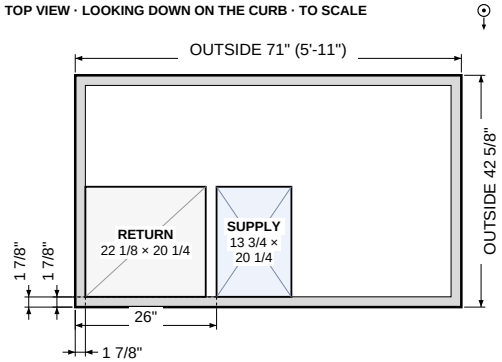

Grey band = curb rail, 1 7/8" wide. Inner line = INSIDE of rail: 67 1/4 × 38 7/8" (outside minus 2 × rail, calculated).
Offsets: from the OUTSIDE left end and the OUTSIDE bottom side of the curb to the opening's near edge. Openings are clear inside sizes.
Measure here: OUTSIDE of the curb rail with a tape; unit end not documented.

Rheem/Ruud VERIFIED
Part # RXKG-AAB08 / -AAB14 / -AAB18 / -AAB24 (also UXKG-AAB..)
OUTSIDE 71 × 42 5/8" · Height 8, 14, 18, 24 in · 3-7 T · legacy
Ref: standard 76-1/4 cabinet layout; x from the return end, y from the long side the openings sit against; RMICRB20 top view: A 22-1/8 (return bay), 2 support, supply 13-3/4, B 37-7/8 = 22-1/8+2+13-3/4 (closes); band 20-1/4 + C support 2 + pan band 16-5/8 + 2 rails = 42-5/8 gives rail 1-7/8 (derived, assumes C = 2 like D). Stretch 82-1/4 cabinet: ret_len 27.625, sup_x 31.5 (B 43-3/8). Bays are clear openings; ducts are 1/2 smaller (21-5/8 / 13-1/4 x 19-3/4)

SOURCE EXCERPT (left: the cited page of the manufacturer or curb-maker document) beside our TOP VIEW drawing (right, to scale, looking down).
Openings are drawn only where their offsets are documented; offsets run from the OUTSIDE left end and OUTSIDE bottom side. Curb-maker sources are UNVERIFIED.

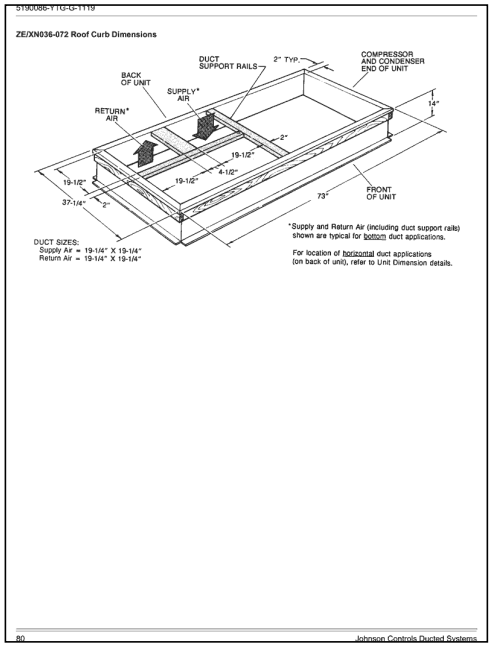
5190086-YTG-G-1119

ZE/XN036-072 Roof Curb Dimensions

DUCT SIZES:
Supply Air = 19-1/4" X 19-1/4"
Return Air = 19-1/4" X 19-1/4"

*Supply and Return Air (including duct support rails) shown are typical for bottom duct applications.

For location of horizontal duct applications (on back of unit), refer to Unit Dimension details.

80 Johnson Controls Ducted Systems

Manufacturer drawing · page 80 · https://files.hvacnavigator.com/p/5190086-ytg-g-1119.pdf

TOP VIEW · LOOKING DOWN ON THE CURB · TO SCALE

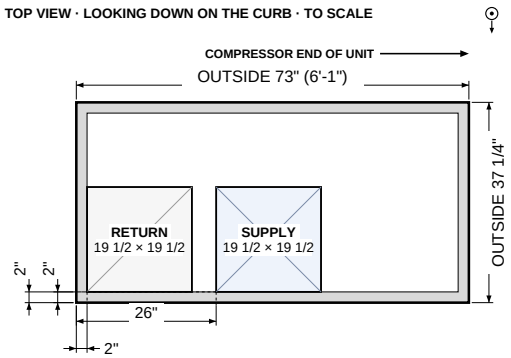

Grey band = curb rail, 2" wide. Inner line = INSIDE of rail: 69 × 33 1/4" (outside minus 2 × rail, calculated).
Offsets: from the OUTSIDE left end and the OUTSIDE bottom side of the curb to the opening's near edge. Openings are clear inside sizes.
Measure here: OUTSIDE of the curb rail with a tape.

York/JCI VERIFIED
Part # 1RC0434 (14 in) / 1RC0465 (8 in)
OUTSIDE 73 × 37 1/4" · Height 8 / 14 in · 3-6 T · legacy
Also OUTSIDE (ProVent CBKDSUN3672 replacement curb O.D. (unverified)) 72 1/2 × 36 3/4"
Ref: x from the non-compressor (left) outside end, y from the BACK outside side; derived: chain 19-1/2 / 4-1/2 / 19-1/2 starts at the inside of the 2 in end rail as drawn, sup_x = 2+19.5+4.5; 19-1/2 across starts at the inside of the back rail, then a 2 in long duct support rail. Frames include duct support rails; ducts 19-1/4 x 19-1/4.

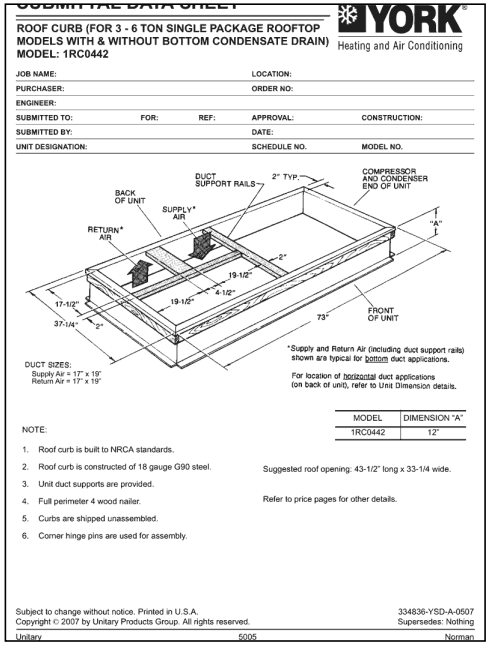
SUBMITTAL DATA SHEET

YORK® Heating and Air Conditioning

ROOF CURB (FOR 3 - 6 TON SINGLE PACKAGE ROOFTOP MODELS WITH & WITHOUT BOTTOM CONDENSATE DRAIN)
MODEL: 1RC0442

JOB NAME:			LOCATION:	
PURCHASER:			ORDER NO:	
ENGINEER:				
SUBMITTED TO:	FOR:	REF:	APPROVAL:	CONSTRUCTION:
SUBMITTED BY:			DATE:	
UNIT DESIGNATION:			SCHEDULE NO.	MODEL NO.

DUCT SIZES:
Supply Air = 17" x 19"
Return Air = 17" x 19"

*Supply and Return Air (including duct support rails) shown are typical for bottom duct applications.

For location of horizontal duct applications (on back of unit), refer to Unit Dimension details.

MODEL	DIMENSION "A"
1RC0442	12"

NOTE:
1. Roof curb is built to NRCA standards.
2. Roof curb is constructed of 18 gauge G90 steel.
3. Unit duct supports are provided.
4. Full perimeter 4 wood nailer.
5. Curbs are shipped unassembled.
6. Corner hinge pins are used for assembly.

Suggested roof opening: 43-1/2" long x 33-1/4 wide.

Refer to price pages for other details.

Subject to change without notice. Printed in U.S.A.
Copyright © 2007 by Unitary Products Group. All rights reserved.
334836-YSD-A-0507
Supersedes: Nothing
Unitary 5005 Norman

Manufacturer drawing · page 1 · https://www.upgnet.com/dsmarketingprod/gatekeeper/Documents/Archive_CDs/York_2014/PDF_FILES/3348

TOP VIEW · LOOKING DOWN ON THE CURB · TO SCALE

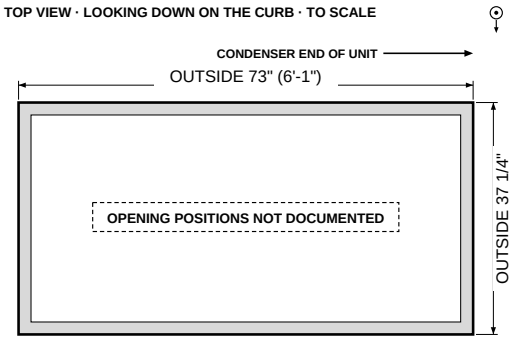

Grey band = curb rail, 2" wide. Inner line = INSIDE of rail: 69 × 33 1/4" (outside minus 2 × rail, calculated).
Supply opening 19 1/2 × 17 1/2": size documented, position not documented (not drawn).
Return opening 19 1/2 × 17 1/2": size documented, position not documented (not drawn).
Measure here: OUTSIDE of the curb rail with a tape.

York/JCI VERIFIED
Part # 1RC0442
OUTSIDE 73 × 37 1/4" · Height 12 in · 3-6 T · legacy
Also OUTSIDE (ProVent CBKDSUN3672 replacement curb O.D. (unverified)) 72 1/2 × 36 3/4"
Ref: x from the end opposite the compressor/condenser, derived as on the 1RC0434 drawing (2 rail + 19-1/2 + 4-1/2); widths 17-1/2 printed; y offset not printed on this sheet (same family drawing has it from the back rail), omitted. Ducts 17 x 19.

SOURCE EXCERPT (left: the cited page of the manufacturer or curb-maker document) beside our TOP VIEW drawing (right, to scale, looking down).
Openings are drawn only where their offsets are documented; offsets run from the OUTSIDE left end and OUTSIDE bottom side. Curb-maker sources are UNVERIFIED.

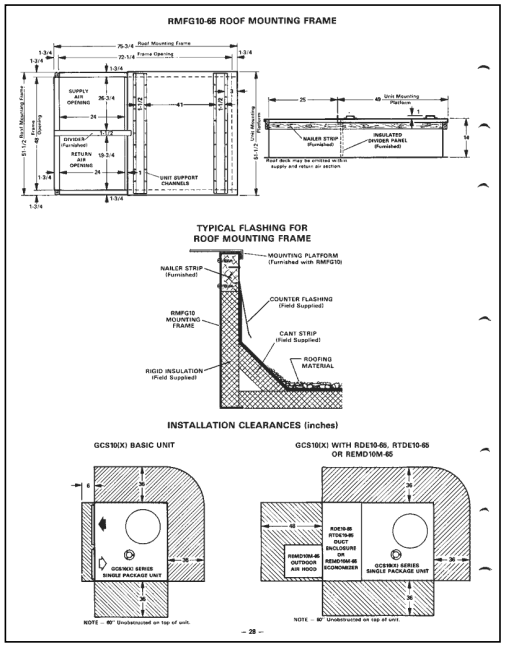

Manufacturer drawing · page 8 · https://tech.lennoxintl.com/C03e7o14l/VIu12Ch2uV/us_ehb_gcs10_8801.pdf

TOP VIEW · LOOKING DOWN ON THE CURB · TO SCALE

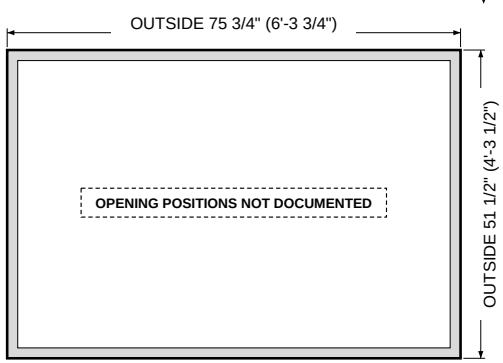

Grey band = curb rail, 1 3/4" wide. Inner line = INSIDE of rail: 72 1/4 × 48" (outside minus 2 × rail, calculated).
Supply opening 24 × 26 3/4": size documented, position not documented (not drawn).
Return opening 24 × 19 3/4": size documented, position not documented (not drawn).
Measure here: OUTSIDE of the curb rail with a tape; unit end not documented.

Lennox VERIFIED
Part # RMFG10-65 (14 in, with unit mounting platform)
OUTSIDE 75 3/4 × 51 1/2" · Height 14 in · 2-5 T · legacy
Ref: y from the side the supply sits against: 1.75 rail, ret_y = 1.75+26.75+1.5 (26-3/4+1-1/2+19-3/4 = 48 inner width, closes); derived; x not dimensioned (openings in the 25 in end section)

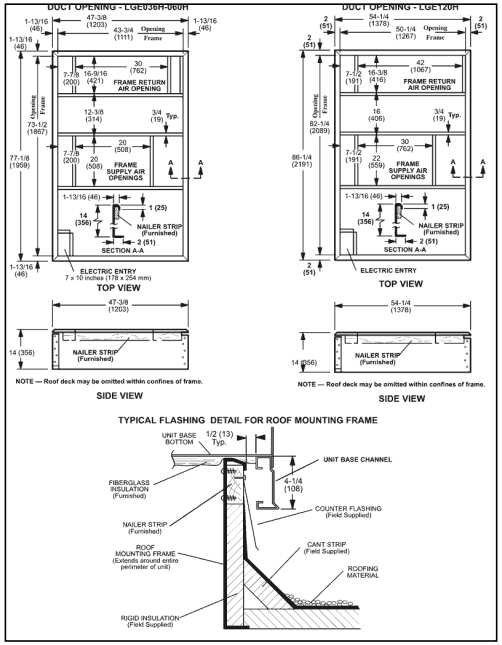

Manufacturer drawing · page 10 · https://tech.lennoxintl.com/C03e7o14l/VIu12Ch2uV/wm_lge_0606.pdf

TOP VIEW · LOOKING DOWN ON THE CURB · TO SCALE

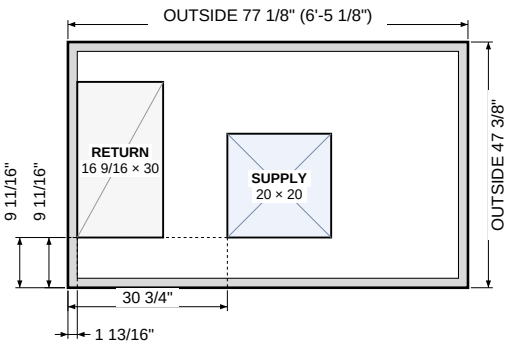

Grey band = curb rail, 1 13/16" wide. Inner line = INSIDE of rail: 73 1/2 × 43 3/4" (outside minus 2 × rail, calculated).
Offsets: from the OUTSIDE left end and the OUTSIDE bottom side of the curb to the opening's near edge. Openings are clear inside sizes.
Measure here: OUTSIDE of the curb rail with a tape; unit end not documented.

Lennox VERIFIED
Part # Roof mounting frame with double duct opening, LGB/LGE036H-060H (14 in); catalog number not printed in submittal
OUTSIDE 77 1/8 × 47 3/8" · Height 14 in · 3-5 T · legacy
Ref: x from return end outside edge, y from the side the 7-7/8 offsets start (plan view, arrowheads at frame opening line); derived: 1-13/16 rail + 7-7/8; sup_x = 1.8125+16.5625+12.375

SOURCE EXCERPT (left: the cited page of the manufacturer or curb-maker document) beside our TOP VIEW drawing (right, to scale, looking down).
Openings are drawn only where their offsets are documented; offsets run from the OUTSIDE left end and OUTSIDE bottom side. Curb-maker sources are UNVERIFIED.

No source excerpt on file for this curb

TOP VIEW · LOOKING DOWN ON THE CURB · TO SCALE

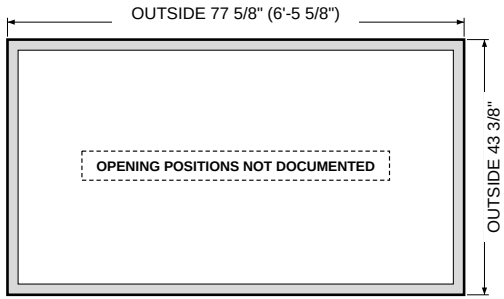

Grey band = curb rail, 1 13/16" wide. Inner line = INSIDE of rail: 74 × 39 3/4" (outside minus 2 × rail, calculated).
Supply opening 32 5/8 × 14 7/8": size documented, position not documented (not drawn).
Return opening 38 1/4 × 12 1/8": size documented, position not documented (not drawn).
Measure here: OUTSIDE of the curb rail with a tape; unit end not documented.

Trane/American Standard VERIFIED
Part # BAYCURB021* (BAYCURB021B)
OUTSIDE 77 5/8 × 43 3/8" · Height 14 in · 3-5 T · legacy
Also OUTSIDE (2nd outline on drawing) 77 1/4 × 43 1/16"
Ref: Outside = curb base 77-5/8 x 43-3/8 (top flange 77-1/4 x 43-1/16). Trane 1996 Voyager catalog p72-73; no curb part # printed (BAYCURB021 per Trane adapter table).
Note: Openings drawn at the printed field-duct sizes; curb openings are about 1/2 in larger. Positions not confirmed (read from a scan).

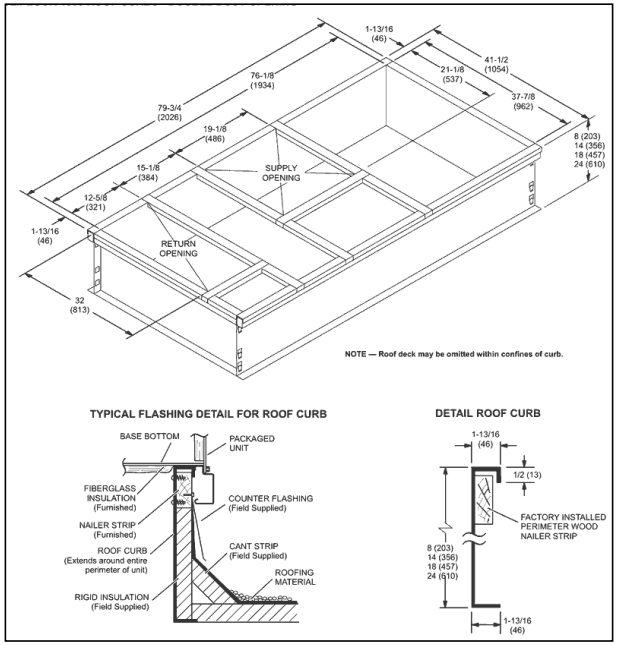

Manufacturer drawing · page 31 · https://tech.lennoxintl.com/C03e7o14l/VIu12Ch2uV/ehb_tg_abox_0807.pdf

TOP VIEW · LOOKING DOWN ON THE CURB · TO SCALE

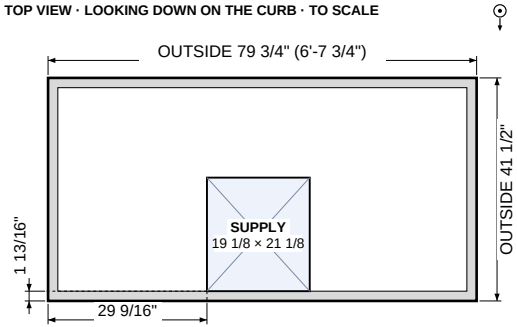

Grey band = curb rail, 1 13/16" wide. Inner line = INSIDE of rail: 76 1/8 × 37 7/8" (outside minus 2 × rail, calculated).
Offsets: from the OUTSIDE left end and the OUTSIDE bottom side of the curb to the opening's near edge. Openings are clear inside sizes.
Return opening 15 1/8 × 32": size documented, position not documented (not drawn).
Measure here: OUTSIDE of the curb rail with a tape; unit end not documented.

Lennox VERIFIED
Part # T1CURB23AN1 (8) / T1CURB20AN1 (14) / T1CURB21AN1 (18) / T1CURB22AN1 (24) cliplock; T1CURB30AN1 / 32AN1 / 33AN1 hinged (8/18/24); T1CURB10AN1 standard 14
OUTSIDE 79 3/4 × 41 1/2" · Height 8, 14, 18, 24 in · 2-6 T · legacy
Ref: x from the return end: rail 1-13/16 + 12-5/8 = 14-7/16 to return, return 15-1/8, supply 19-1/8 follows in the printed chain (derived); sup_y from the far long side (21-1/8 dimensioned from that inner rail); return's side offset not printed

SOURCE EXCERPT (left: the cited page of the manufacturer or curb-maker document) beside our TOP VIEW drawing (right, to scale, looking down).
Openings are drawn only where their offsets are documented; offsets run from the OUTSIDE left end and OUTSIDE bottom side. Curb-maker sources are UNVERIFIED.

Notes: 1. Adapters are welded, insulated, and totally sealed.
2. Adapters have duct transitions for ducted systems (not concentric).
3. Submittal drawings are available.
4. "New" adapters are not designed but are available. Part numbers will be as they are developed.
5. Consult RSI for concentric duct applications.
6. Field information may be required before production of adapters.
7. Units with different color text have multiple size curbs. Verify correct curb.

Bryant, Day and Night, and Payne					
Unit Model No.	Curb L	x W	Curb Model	Notes	Footprint Code
579C 048-060	81.13	45.56	70849D01	Bottom discharge curb.	RSLR
579C 090-150	84.44	60.63	70849DA2	Bottom discharge curb.	PRLM
579C 180	102.38	69.63	70849DA3	Bottom discharge curb.	PRLM
579C 240	150.00	69.38	70849D04	Bottom discharge curb.	VLRL
579C 300-360	164.75	69.38	70849D05	Bottom discharge curb.	VLRL
579D 036-060	69.13	36.50	309427-101	Bottom discharge curb.	SERL
579D 090	80.56	60.75	307175-102	Bottom discharge curb.	SERL
579D 120-180	77.75	74.50	308450-201	Bottom discharge curb.	PRLM
579E 240-300	77.75	70.56	50PQ900221	Bottom discharge curb.	PRLM
579E-G048125-060	70.50	62.50	304851-304	Bottom discharge curb.	SRSE
580B 036-072	70.88	46.56	314213-201	Bottom discharge curb.	SRSE
580B 090-120	81.75	59.38	389004-201	Bottom discharge curb.	SRSE
580C-D 036-072	70.88	40.69	389028-201	Bottom discharge curb.	SRSE
585A 018-024	54.50	43.75	301585-301	Bottom discharge curb.	SRSE
585A 024-036	64.50	43.75	301585-302	Bottom discharge curb.	SRSE
585A 048-060	70.50	57.75	301585-303	Bottom discharge curb.	SRSE
585A 048-060	70.50	66.00	301585-304	Bottom discharge curb.	SRSE
585C 018050-036075	64.00	51.25	72-24-02	Stiles Corp. made curb.	SRSE
585C 036125-060150	77.00	51.25	72-24-03	Stiles Corp. made curb.	SRSE
585C 090	90.00	55.00	DPPC-008DG	Stiles Corp. made curb.	RDSL
585C 090-150	81.75	53.50	389028-203	Bottom discharge curb.	SRSE
585E 090	80.56	60.75	307175-102	Bottom discharge curb.	SERL
585E-G 018-036075	59.50	50.50	304851-303	Bottom discharge curb.	SRSE
585E-G048125-060	70.50	62.50	304851-304	Bottom discharge curb.	SRSE



Curb-maker drawing (UNVERIFIED) · page 2 · https://www.ruskinrooftopsystems.com/Portals/5/bdp_web_adapters.pdf

TOP VIEW · LOOKING DOWN ON THE CURB · TO SCALE

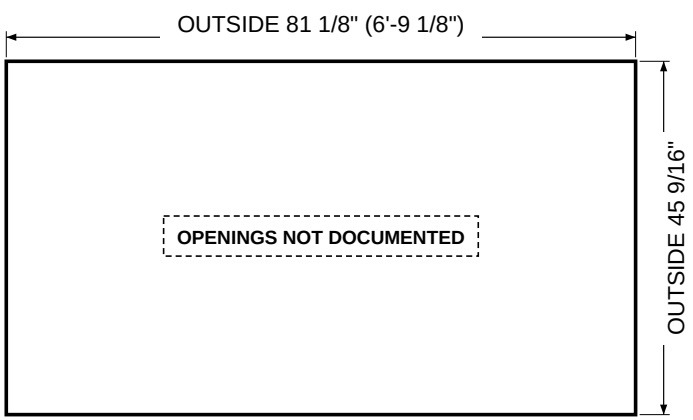

Rail width not documented, so the inside line is not drawn.
Measure here: OUTSIDE of the curb rail with a tape; unit end not documented.

Carrier/Bryant/ICP — UNVERIFIED
Part # 70849D01
OUTSIDE 81 1/8 × 45 9/16" · Tons 4-5 T · legacy

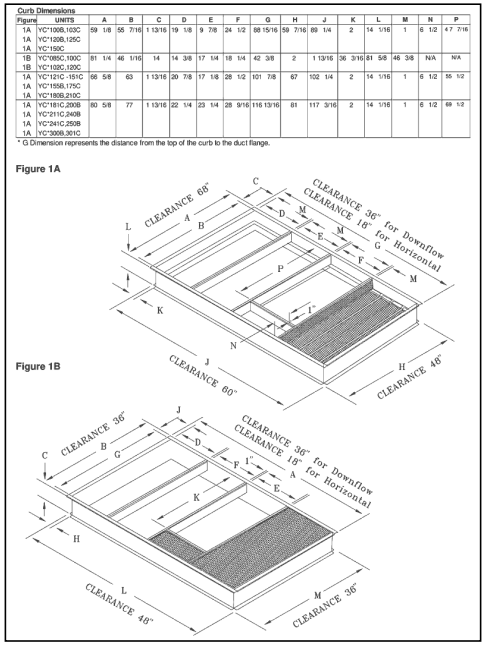

Figure	UNITS	A	B	C	D	E	F	G	H	J	K	L	M	N	P
1A	YC*120B,123C	59 1/8	55 7/16	1 13/16	19 1/8	9 7/8	24 1/2	88 15/16	59 7/16	69 1/4	2	14 1/16	1	6 1/2	47 7/16
1A	YC*125C														
1A	YC*150C														
1B	YC*085C, 100C	81 1/4	46 1/16	1/4	14 3/8	17 1/4	18 1/4	42 3/8	2	1 13/16	36 3/16	81 5/8	46 3/8	N/A	N/A
1B	YC*102C,120C														
1A	YC*121C - 151C	66 5/8	63	1 13/16	20 7/8	17 1/8	28 1/2	101 7/8	67	102 1/4	2	14 1/16	1	6 1/2	55 1/2
1A	YC*155B,175C														
1A	YC*180B,210C														
1A	YC*181C,200B	80 5/8	77	1 13/16	22 1/4	23 1/4	28 9/16	116 13/16	81	117 3/16	2	14 1/16	1	6 1/2	69 1/2
1A	YC*211C,240B														
1A	YC*241C,250B														
1A	YC*300B,301C														

* G Dimension represents the distance from the top of the curb to the duct flange.

Manufacturer drawing · page 7 · http://www.delairteam.com/service/techdisk/Commercial/Equipment/Trane/Voyager/Voyager%201998.pdf

TOP VIEW · LOOKING DOWN ON THE CURB · TO SCALE

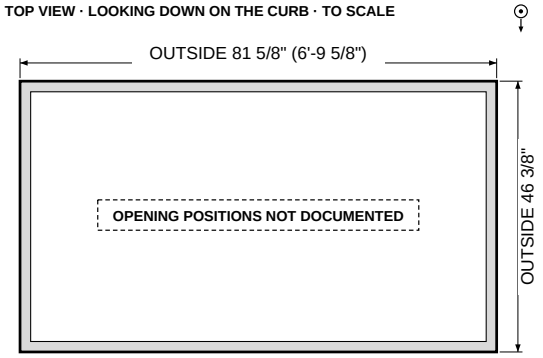

Grey band = curb rail, 1 13/16" wide. Inner line = INSIDE of rail: 78 × 42 3/4" (outside minus 2 × rail, calculated).
Supply opening 17 1/4 × 36 3/16": size documented, position not documented (not drawn).
Return opening 14 3/8 × 36 3/16": size documented, position not documented (not drawn).
Measure here: OUTSIDE of the curb rail with a tape; unit end not documented.

Trane/American Standard — VERIFIED
Part # BAYCURB022*
OUTSIDE 81 5/8 × 46 3/8" · Height 14 in · 5-10 T · legacy
Also OUTSIDE (Trane A × B) 81 1/4 × 46 1/16"
Ref: sizes only (D and E as printed, K=36-3/16 across); positions omitted because the Fig.1B bay order (D, F, 1 in, E) does not say which bays are open; rail J 1-13/16

SOURCE EXCERPT (left: the cited page of the manufacturer or curb-maker document) beside our TOP VIEW drawing (right, to scale, looking down).
Openings are drawn only where their offsets are documented; offsets run from the OUTSIDE left end and OUTSIDE bottom side. Curb-maker sources are UNVERIFIED.

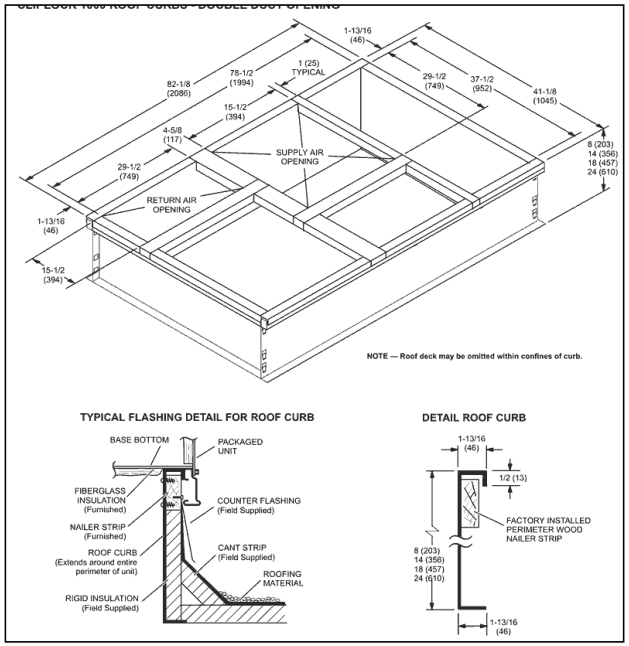

Manufacturer drawing · page 36 · https://tech.lennoxintl.com/C03e7o14l/Vlu12Ch2uV/ehb_lg_03to06_0808.pdf

TOP VIEW · LOOKING DOWN ON THE CURB · TO SCALE

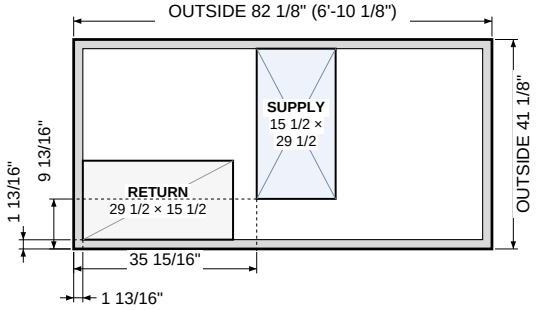

Grey band = curb rail, 1 13/16" wide. Inner line = INSIDE of rail: 78 1/2 × 37 1/2" (outside minus 2 × rail, calculated).
Offsets: from the OUTSIDE left end and the OUTSIDE bottom side of the curb to the opening's near edge. Openings are clear inside sizes.
Measure here: OUTSIDE of the curb rail with a tape; unit end not documented.

Lennox — VERIFIED
Part # LARMF03/07S-14 / -18 / -24 (Cliplock 1000); LARMF03/07-14 / -24 (standard); L1CURB23A-1 (8 in cliplock)
OUTSIDE 82 1/8 × 41 1/8" · Height 8 (L1CURB23A-1), 14, 18, 24 in · 3-6 T · legacy
Ref: x from return end: return starts at inside of end rail; supply x = 1-13/16+29-1/2+4-5/8 (derived). y from the near long side (return side): return 1-13/16; supply is printed 29-1/2 from the FAR inner rail, so sup_y = 41-1/8 - 1-13/16 - 29-1/2 (derived)

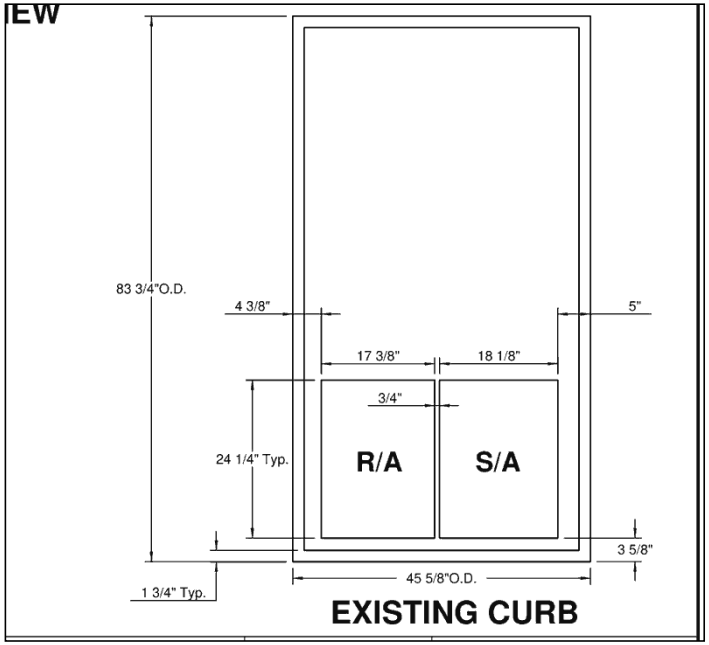

Curb-maker drawing (UNVERIFIED) · page 1 · https://www.proventusa.com/-/media/provent/catalog/pdf/york-curb-adapters/curb/sunline3

TOP VIEW · LOOKING DOWN ON THE CURB · TO SCALE

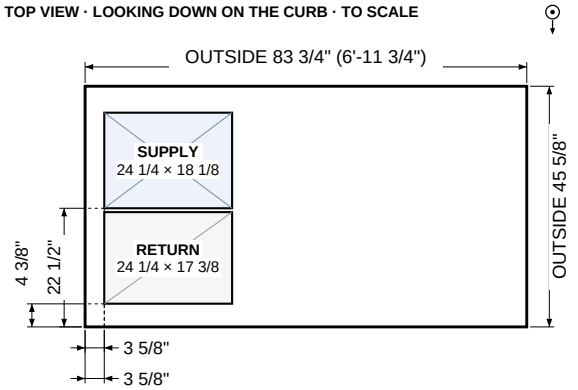

Rail width not documented, so the inside line is not drawn.
Offsets: from the OUTSIDE left end and the OUTSIDE bottom side of the curb to the opening's near edge. Openings are clear inside sizes.
Measure here: OUTSIDE of the curb rail with a tape; unit end not documented.

Carrier/Bryant/ICP — UNVERIFIED
Part # factory curb no. not found (existing-curb size from ProVent CA-SUN3672-CAR15)
OUTSIDE 83 3/4 × 45 5/8" · Tons 5 T · legacy
Ref: x from the curb END nearest the openings (both openings sit at one end); y from the long SIDE nearest the return (return 4 3/8 in from that side, 3/4 in gap, supply ends 5 in from the far side); rail 1 3/4 typ

SOURCE EXCERPT (left: the cited page of the manufacturer or curb-maker document) beside our TOP VIEW drawing (right, to scale, looking down).
Openings are drawn only where their offsets are documented; offsets run from the OUTSIDE left end and OUTSIDE bottom side. Curb-maker sources are UNVERIFIED.

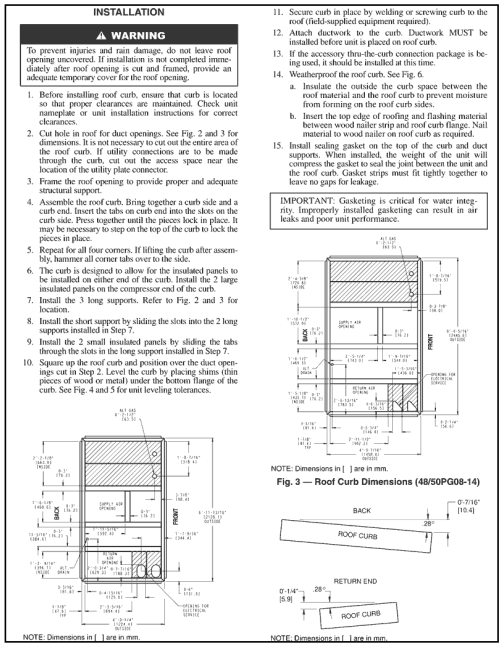

INSTALLATION

⚠ WARNING

To prevent injuries and rain damage, do not leave roof opening uncovered. If installation is not completed immediately after roof opening is cut and framed, provide an adequate temporary cover for the roof opening.

1. Before installing roof curb, ensure that curb is located so that proper clearances are maintained. Check unit nameplate or unit installation instructions for correct clearances.
2. Cut hole in roof for duct openings. See Fig. 2 and 3 for dimensions. It is not necessary to cut out the entire area of the roof curb. If utility connections are to be made through the curb, cut out the access space near the location of the utility plate connector.
3. Frame the roof opening to provide proper and adequate structural support.
4. Assemble the roof curb. Bring together a curb side and a curb end. Insert the tabs on curb end into the slots on the curb side. Press together until the pieces lock in place. It may be necessary to step on the top of the curb to lock the pieces in place.
5. Repeat for all four corners. If lifting the curb after assembly, hammer all corner tabs over to the side.
6. The curb is designed to allow for the insulated panels to be installed on either end of the curb. Install the 2 large insulated panels on the compressor end of the curb.
7. Install the 3 long supports. Refer to Fig. 2 and 3 for location.
8. Install the short support by sliding the slots into the 2 long supports installed in Step 7.
9. Install the 2 small insulated panels by sliding the tabs through the slots in the long support installed in Step 7.
10. Square up the roof curb and position over the duct openings cut in Step 2. Level the curb by placing shims (thin pieces of wood or metal) under the bottom flange of the curb. See Fig. 4 and 5 for unit leveling tolerances.
11. Secure curb in place by welding or screwing curb to the roof (field-supplied equipment required).
12. Attach ductwork to the curb. Ductwork MUST be installed before unit is placed on roof curb.
13. If the accessory thru-the-curb connection package is being used, it should be installed at this time.
14. Weatherproof the roof curb. See Fig. 6.
    a. Insulate the outside the curb space between the roof material and the roof curb to prevent moisture from forming on the roof curb sides.
    b. Insert the top edge of roofing and flashing material between wood nailer strip and roof curb flange. Nail material to wood nailer on roof curb as required.
15. Install sealing gasket on the top of the curb and duct supports. When installed, the weight of the unit will compress the gasket to seal the joint between the unit and the roof curb. Gasket strips must fit tightly together to leave no gaps for leakage.

IMPORTANT: Gasketing is critical for water integrity. Improperly installed gasketing can result in air leaks and poor unit performance.

NOTE: Dimensions in [ ] are in mm.

Fig. 3 — Roof Curb Dimensions (48/50PG08-14)

NOTE: Dimensions in [ ] are in mm.

Manufacturer drawing · page 2 · https://www.shareddocs.com/hvac/docs/1005/Public/00/48_50PG-1SI.pdf

TOP VIEW · LOOKING DOWN ON THE CURB · TO SCALE

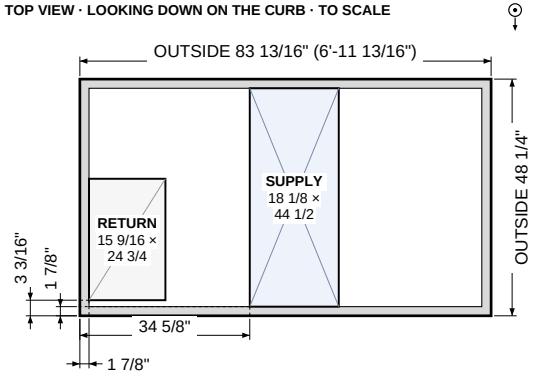

Grey band = curb rail, 1 7/8" wide. Inner line = INSIDE of rail: 80 1/16 × 44 1/2" (outside minus 2 × rail, calculated).

Offsets: from the OUTSIDE left end and the OUTSIDE bottom side of the curb to the opening's near edge. Openings are clear inside sizes.

Measure here: OUTSIDE of the curb rail with a tape; unit end not documented.

Carrier/Bryant/ICP — VERIFIED

Part # CRRFCURB020A00 (14 in) / CRRFCURB032A00 (24 in)

OUTSIDE 83 13/16 × 48 1/4" · Height 14, 24 in · Tons 2-6 T · legacy

Ref: x from the outside of the RETURN END, y from the outside of the BACK side; derived chain 1-7/8 rail + 1'-3 9/16 + 0'-3 + 11 3/16 + 0'-3 = 34.625 to supply (whole chain closes to 83.75 vs 83.8125); sup_wid = 48.25 - 2x1.875 incl. the 3 in center support (1'-11 5/16 + 3 + remainder); ret_y printed 3-3/16

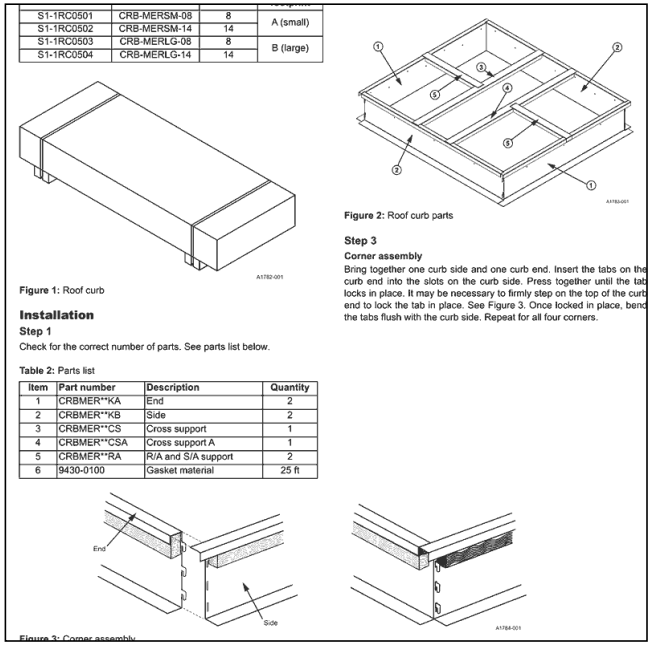

S1-1RC0501	CRB-MERSM-08	8	A (small)
S1-1RC0502	CRB-MERSM-14	14	
S1-1RC0503	CRB-MERLG-08	8	B (large)
S1-1RC0504	CRB-MERLG-14	14	

Figure 1: Roof curb

Installation

Step 1

Check for the correct number of parts. See parts list below.

Table 2: Parts list

Item	Part number	Description	Quantity
1	CRBMER**KA	End	2
2	CRBMER**KB	Side	2
3	CRBMER**CS	Cross support	1
4	CRBMER**CSA	Cross support A	1
5	CRBMER**RA	R/A and S/A support	2
6	9430-0100	Gasket material	25 ft

Figure 2: Roof curb parts

Step 3

Corner assembly

Bring together one curb side and one curb end. Insert the tabs on the curb end into the slots on the curb side. Press together until the tab locks in place. It may be necessary to firmly step on the top of the curb end to lock the tab in place. See Figure 3. Once locked in place, bend the tabs flush with the curb side. Repeat for all four corners.

Figure 3: Corner assembly

Manufacturer drawing · page 1 · https://files.hvacnavigator.com/p/1199093-uai-e-0522.pdf

TOP VIEW · LOOKING DOWN ON THE CURB · TO SCALE

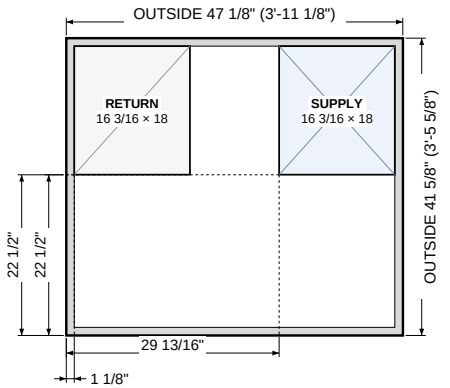

Grey band = curb rail, 1 1/8" wide. Inner line = INSIDE of rail: 44 7/8 × 39 3/8" (outside minus 2 × rail, calculated).

Offsets: from the OUTSIDE left end and the OUTSIDE bottom side of the curb to the opening's near edge. Openings are clear inside sizes.

Measure here: OUTSIDE of the curb rail with a tape; unit end not documented.

York/JCI — VERIFIED

Part # S1-1RC0503 (8 in) / S1-1RC0504 (14 in)

OUTSIDE 47 1/8 × 41 5/8" · Height 8 / 14 in · 3.5-5 T

Ref: length = A (47.125), width = B (41.625); x from the RETURN-end outside edge, y from the side AWAY from the openings (left in Fig 5). Derived: rail 1.125 = (A-C)/2 = (B-D)/2; sup_x = A-1.125-E; y = B-1.125-G. Framed openings E/F x G; duct 15-1/2 x 17-1/2.

SOURCE EXCERPT (left: the cited page of the manufacturer or curb-maker document) beside our TOP VIEW drawing (right, to scale, looking down).
Openings are drawn only where their offsets are documented; offsets run from the OUTSIDE left end and OUTSIDE bottom side. Curb-maker sources are UNVERIFIED.

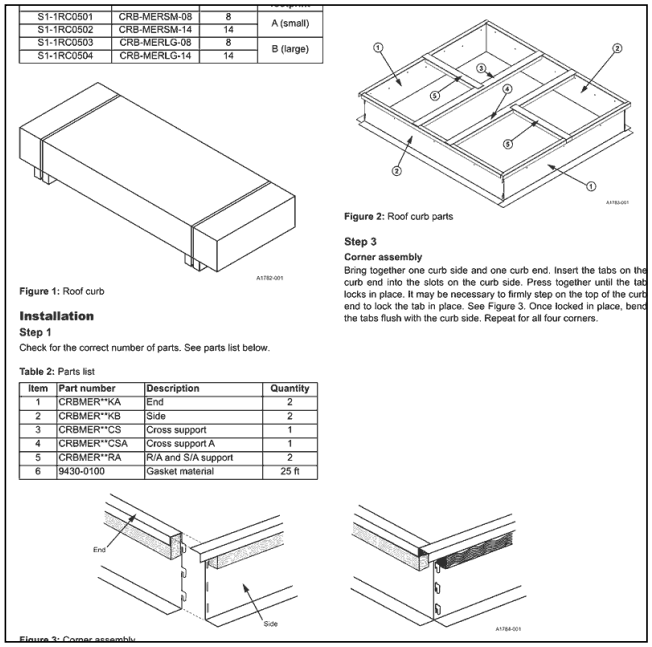

S1-1RC0501	CRB-MERSM-08	8	A (small)
S1-1RC0502	CRB-MERSM-14	14	
S1-1RC0503	CRB-MERLG-08	8	B (large)
S1-1RC0504	CRB-MERLG-14	14	

Figure 1: Roof curb

Figure 2: Roof curb parts

Installation

Step 1

Check for the correct number of parts. See parts list below.

Table 2: Parts list

Item	Part number	Description	Quantity
1	CRBMER**KA	End	2
2	CRBMER**KB	Side	2
3	CRBMER**CS	Cross support	1
4	CRBMER**CSA	Cross support A	1
5	CRBMER**RA	R/A and S/A support	2
6	9430-0100	Gasket material	25 ft

Step 3

Corner assembly

Bring together one curb side and one curb end. Insert the tabs on the curb end into the slots on the curb side. Press together until the tab locks in place. It may be necessary to firmly step on the top of the curb end to lock the tab in place. See Figure 3. Once locked in place, bend the tabs flush with the curb side. Repeat for all four corners.

End

Side

Figure 3: Corner assembly

Manufacturer drawing · page 1 · https://files.hvacnavigator.com/p/1199093-uai-e-0522.pdf

TOP VIEW · LOOKING DOWN ON THE CURB · TO SCALE

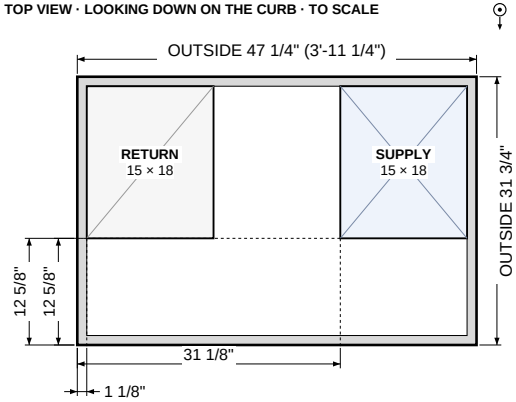

Grey band = curb rail, 1 1/8" wide. Inner line = INSIDE of rail: 45 × 29 1/2" (outside minus 2 × rail, calculated).

Offsets: from the OUTSIDE left end and the OUTSIDE bottom side of the curb to the opening's near edge. Openings are clear inside sizes.

Measure here: OUTSIDE of the curb rail with a tape; unit end not documented.

York/JCI VERIFIED

Part # S1-1RC0501 (8 in) / S1-1RC0502 (14 in)

OUTSIDE 47 1/4 × 31 3/4" · Height 8 / 14 in · 2-3.5 T

Ref: length = A (47.25), width = B (31.75); x from the RETURN-end outside edge, y from the side AWAY from the openings (left in Fig 5). Derived: rail 1.125 = (A-C)/2 = (B-D)/2; sup_x = A-1.125-E; y = B-1.125-G. Framed openings E/F x G; duct 14-1/2 x 17-1/2.

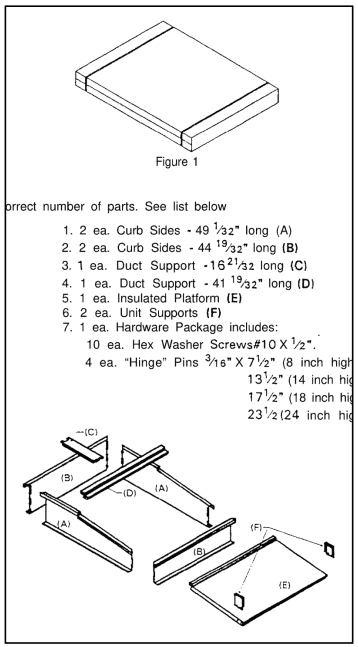

Figure 1

orrect number of parts. See list below

1. 2 ea. Curb Sides - 49 1/32" long (A)
2. 2 ea. Curb Sides - 44 19/32" long **(B)**
3. 1 ea. Duct Support - 16 21/32 long **(C)**
4. 1 ea. Duct Support - 41 19/32" long **(D)**
5. 1 ea. Insulated Platform **(E)**
6. 2 ea. Unit Supports **(F)**
7. 1 ea. Hardware Package includes:
   10 ea. Hex Washer Screws#10 X 1/2".
   4 ea. "Hinge" Pins 3/16" X 7 1/2" (8 inch high
   13 1/2" (14 inch hig
   17 1/2" (18 inch hig
   23 1/2 (24 inch hig

(C)
(B)
(D)
(A)
(A)
(F)
(B)
(E)

Manufacturer drawing · page 1 · https://resource.bakerdist.com/is/content/Watscocom/Gemaire/rheem_rxqg-aaa14_article_13891119(

TOP VIEW · LOOKING DOWN ON THE CURB · TO SCALE

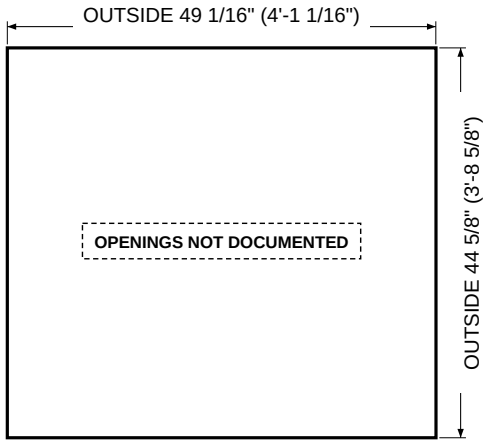

Rail width not documented, so the inside line is not drawn.

Measure here: OUTSIDE of the curb rail with a tape; unit end not documented.

Rheem/Ruud VERIFIED

Part # RXQG-AAA08 / RXQG-AAA14 / RXQG-AAA18 / RXQG-AAA24

OUTSIDE 49 1/16 × 44 5/8" · Height 8 / 14 / 18 / 24 in · Tons 2-5 T

SOURCE EXCERPT (left: the cited page of the manufacturer or curb-maker document) beside our TOP VIEW drawing (right, to scale, looking down).
Openings are drawn only where their offsets are documented; offsets run from the OUTSIDE left end and OUTSIDE bottom side. Curb-maker sources are UNVERIFIED.

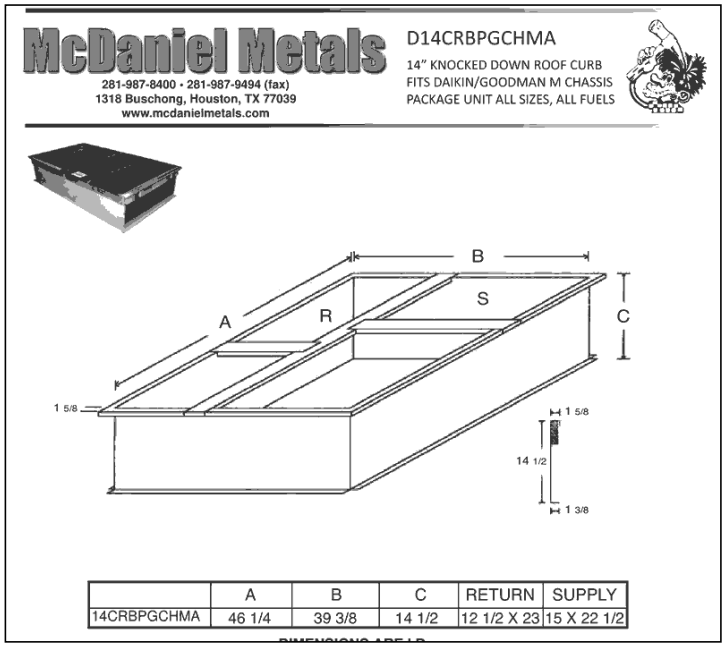

	A	B	C	RETURN	SUPPLY
14CRBPGCHMA	46 1/4	39 3/8	14 1/2	12 1/2 X 23	15 X 22 1/2

Manufacturer drawing · page 1 · https://www.rogerssupply.com/Attachment/DownloadFile?downloadId=20395

TOP VIEW · LOOKING DOWN ON THE CURB · TO SCALE

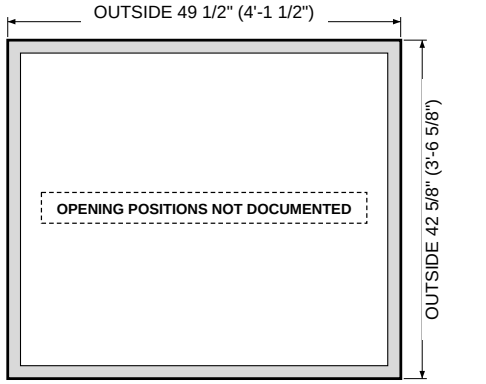

Grey band = curb rail, 1 5/8" wide. Inner line = INSIDE of rail: 46 1/4 × 39 3/8" (outside minus 2 × rail, calculated).
Opening sizes are in the list; their positions are not documented, so none are drawn.
Measure here: OUTSIDE of the curb rail with a tape; unit end not documented.

Daikin/Goodman/Amana CALCULATED
Part # D14CRBPGCHMA (14CRBPGCHMA; replaces PGC101/102/103)
OUTSIDE 49 1/2 × 42 5/8" · Height 14 (18, 24 available) in · 2-5 T
Ref: sizes only; sheet gives no along/across orientation or offsets for the openings (C = 14 1/2 unlabelled bay dim)

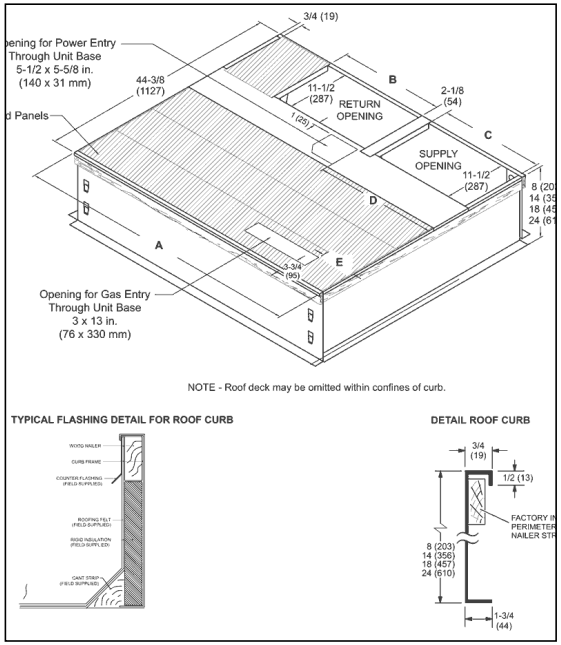

Manufacturer drawing · page 14 · https://www.lennox.com/dA/5867fdc978/ehb_lrp14ge_gx_1ph_2403.pdf

TOP VIEW · LOOKING DOWN ON THE CURB · TO SCALE

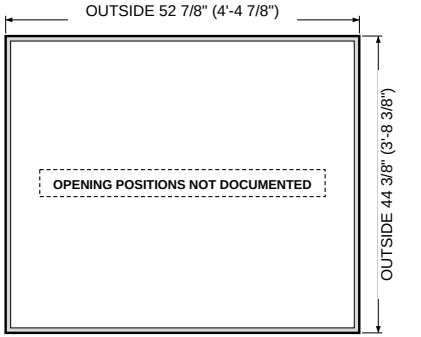

Grey band = curb rail, 3/4" wide. Inner line = INSIDE of rail: 51 3/8 × 42 7/8" (outside minus 2 × rail, calculated).
Supply opening 19 1/2 × 11 1/2": size documented, position not documented (not drawn).
Return opening 19 1/2 × 11 1/2": size documented, position not documented (not drawn).
Measure here: OUTSIDE of the curb rail with a tape; unit end not documented.

Lennox VERIFIED
Part # Clip curbs 21J17 (8) / 21J19 (14) / 21J20 (18) / 21J25 (24) for 042-060; 21J13/21J14/21J15/21J16 for 024-036; adjustable pitch 22V55 welded / 21U04 clip (042-060), 22V54 / 21J26 (024-036)
OUTSIDE 52 7/8 × 44 3/8" · Height 8 / 14 / 18 / 24 in · 2-5 T
Ref: 042-060 curb; top rail 3/4 per drawing; openings in line along the length against one long side with 2-1/8 divider between; offsets not dimensioned (024-036: ret 16.875 x 11.5, sup 13.875 x 11.5)

SOURCE EXCERPT (left: the cited page of the manufacturer or curb-maker document) beside our TOP VIEW drawing (right, to scale, looking down).
Openings are drawn only where their offsets are documented; offsets run from the OUTSIDE left end and OUTSIDE bottom side. Curb-maker sources are UNVERIFIED.

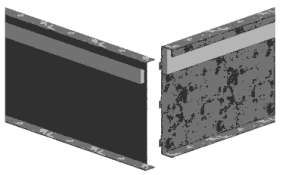

Fig. 1 - Side & End Assembly

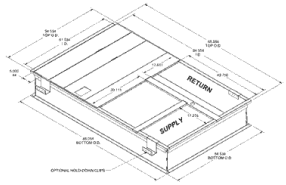

Fig. 3 - 7.5 to 12.5 Ton Roof Curbs

4. Create two roof opening cuts in the roof to the approximate size of the return and supply openings on your curb. Refer to your curbs dimensions displayed in Figures 2 or 3. It is not necessary to cut out the entire area of the roof curb.
5. Frame the roof opening to provide adequate structural support.
6. Position and install the curb around the roof opening location(s), and assure the curb is square by matching measurements from corner to corner.
7. Level the curb by placing shims (thin pieces of wood or metal) under the bottom flange of the curb.
8. Secure curb in place by welding or screwing the curb to the roof.

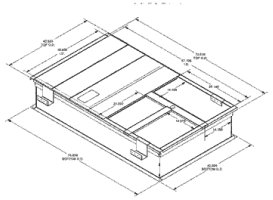

Fig. 2 - 3 to 6 Ton Roof Curbs

9. Attach ductwork to the curb. Ductwork MUST be installed before unit is placed on roof curb. See Table 2 for recommended duct sizes.
10. The roof curb and unit must be sealed completely to prevent any water or air leakages. See Figure 4.
11. Insulate the outside of the curb using rigid insulation between the roof material and the roof curb.
12. Insert the top edge of roofing and flashing material between wood nailer strip and roof curb flange. Nail material to wood nailer on roof curb as required. See Figures 4 and 5.
13. Install supply and return duct into duct openings in roof curb. Refer to Table 2 below.
14. Proceed to applying the gasket material.
15. Properly place the rooftop unit onto the roof curb. Refer to the rooftop unit installation manual for rigging and placement instructions provided by the manufacturer.

Recommended Duct Sizes		
Unit Tonnage	Return	Supply
3 to 6	28.5 x 13.5	20.75 x 13.75
7.5 to 12.5	42.75 x 16.875	29.25 x 16.25

Table 2 - Duct Sizes

Manufacturer drawing · page 2 · https://cdn.daikincloud.io/PIM/Assets/Documents/IM-IOD-7122B.pdf

TOP VIEW · LOOKING DOWN ON THE CURB · TO SCALE

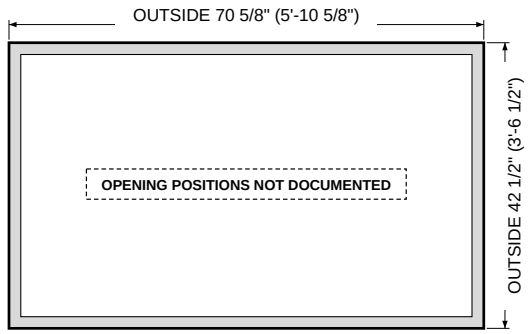

Grey band = curb rail, 1 3/4" wide. Inner line = INSIDE of rail: 67 1/8 × 39" (outside minus 2 × rail, calculated).
Supply opening 15 × 21 1/2": size documented, position not documented (not drawn).
Return opening 14 3/16 × 29 1/8": size documented, position not documented (not drawn).
Measure here: OUTSIDE of the curb rail with a tape; unit end not documented.

Daikin/Goodman/Amana — **VERIFIED**
Part # 0270L02688MC (14 in) / 0270L02689MC (24 in) (Micro Metl 0221L00014 / 0221L00015)
OUTSIDE 70 5/8 × 42 1/2" · Height 14, 24 (seismic 0270L02692MC / hurricane welded 0221L00020) in · 3-6 T
Ref: sizes from IOD-7122B Fig.2; rail 1.75 derived = (70.638-67.138)/2; offsets not dimensioned

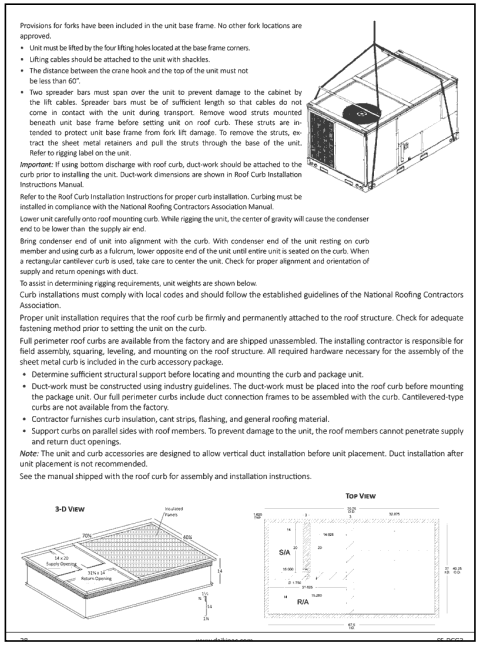

Provisions for forks have been included in the unit base frame. No other fork locations are approved.

- Unit must be lifted by the four lifting holes located at the base frame corners.
- Lifting cables should be attached to the unit with shackles.
- The distance between the crane hook and the top of the unit must not be less than 60".
- Two spreader bars must span over the unit to prevent damage to the cabinet by the lift cables. Spreader bars must be of sufficient length so that cables do not come in contact with the unit during transport. Remove wood struts mounted beneath unit base frame before setting unit on roof curb. These struts are intended to protect unit base frame from fork lift damage. To remove the struts, extract the sheet metal retainers and pull the struts through the base of the unit. Refer to rigging label on the unit.

Important: If using bottom discharge with roof curb, duct-work should be attached to the curb prior to installing the unit. Duct-work dimensions are shown in Roof Curb Installation Instructions Manual.

Refer to the Roof Curb Installation Instructions for proper curb installation. Curbing must be installed in compliance with the National Roofing Contractors Association Manual.

Lower unit carefully onto roof mounting curb. While rigging the unit, the center of gravity will cause the condenser end to be lower than the supply air end.

Bring condenser end of unit into alignment with the curb. With condenser end of the unit resting on curb member and using curb as a fulcrum, lower opposite end of the unit until entire unit is seated on the curb. When a rectangular cantilever curb is used, take care to center the unit. Check for proper alignment and orientation of supply and return openings with duct.

To assist in determining rigging requirements, unit weights are shown below.

Curb installations must comply with local codes and should follow the established guidelines of the National Roofing Contractors Association.

Proper unit installation requires that the roof curb be firmly and permanently attached to the roof structure. Check for adequate fastening method prior to setting the unit on the curb.

Full perimeter roof curbs are available from the factory and are shipped unassembled. The installing contractor is responsible for field assembly, squaring, leveling, and mounting on the roof structure. All required hardware necessary for the assembly of the sheet metal curb is included in the curb accessory package.

- Determine sufficient structural support before locating and mounting the curb and package unit.
- Duct-work must be constructed using industry guidelines. The duct-work must be placed into the roof curb before mounting the package unit. Our full perimeter curbs include duct connection frames to be assembled with the curb. Cantilevered-type curbs are not available from the factory.
- Contractor furnishes curb insulation, cant strips, flashing, and general roofing material.
- Support curbs on parallel sides with roof members. To prevent damage to the unit, the roof members cannot penetrate supply and return duct openings.

Note: The unit and curb accessories are designed to allow vertical duct installation before unit placement. Duct installation after unit placement is not recommended.

See the manual shipped with the roof curb for assembly and installation instructions.

3-D VIEW

TOP VIEW

Manufacturer drawing · page 28 · https://cdn.daikincloud.io/PIM/Assets/Documents/112148.pdf

TOP VIEW · LOOKING DOWN ON THE CURB · TO SCALE

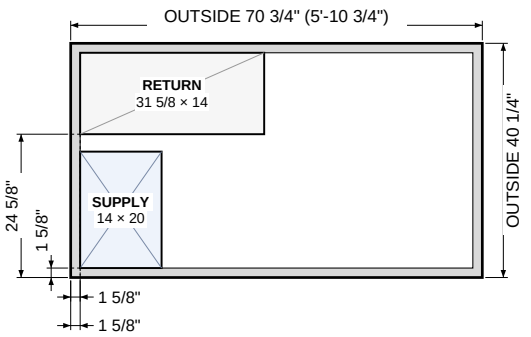

Grey band = curb rail, 1 5/8" wide. Inner line = INSIDE of rail: 67 1/2 × 37" (outside minus 2 × rail, calculated).
Offsets: from the OUTSIDE left end and the OUTSIDE bottom side of the curb to the opening's near edge. Openings are clear inside sizes.
Measure here: OUTSIDE of the curb rail with a tape; unit end not documented.

Daikin/Goodman/Amana — **VERIFIED**
Part # 14CURB3672B (14 in) - Goodman CPC/CPG/CPH & Daikin DCC/DCG 3-6T full-perimeter curb
OUTSIDE 70 3/4 × 40 1/4" · Height 14 in · 3-6 T
Also OUTSIDE (Goodman sheet) 74 × 40 1/4"
Ref: x from the supply/return end outside edge (left in SS-DCG3 Top View), y from the side the supply touches (top of view); both openings against that end rail; ret_y = 1.625 + 20 + 3 divider (derived; 20+3+14 = 37 I.D. closes)

SOURCE EXCERPT (left: the cited page of the manufacturer or curb-maker document) beside our TOP VIEW drawing (right, to scale, looking down).
Openings are drawn only where their offsets are documented; offsets run from the OUTSIDE left end and OUTSIDE bottom side. Curb-maker sources are UNVERIFIED.

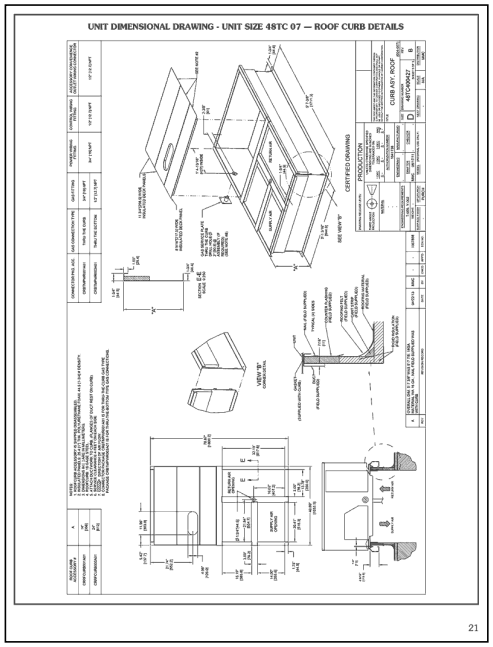

Manufacturer drawing · page 21 · https://www.shareddocs.com/hvac/docs/1005/public/05/48tc-7-16-03pd.pdf

TOP VIEW · LOOKING DOWN ON THE CURB · TO SCALE

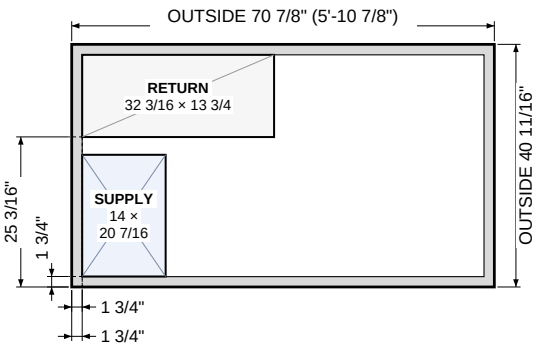

Grey band = curb rail, 1 3/4" wide. Inner line = INSIDE of rail: 67 3/8 × 37 3/16" (outside minus 2 × rail, calculated).
Offsets: from the OUTSIDE left end and the OUTSIDE bottom side of the curb to the opening's near edge. Openings are clear inside sizes.
Measure here: OUTSIDE of the curb rail with a tape; unit end not documented.

Carrier/Bryant/ICP — VERIFIED
Part # CRRFCURB001A01 (14 in) / CRRFCURB002A01 (24 in)
OUTSIDE 70 7/8 × 40 11/16" · Height 14 / 24 in · Tons 3-6 T
Also OUTSIDE (2nd outline on drawing) 67 3/8 × 37 3/16"
Ref: x from the opening end, y from the supply side, both from the plan-view outline (70.87 x 40.69); 1.75 band = rail/flange as printed; ret_len 32.19 and ret_y 25.16 derived (15.19+3.00+14.00; 1.75+20.41+3.00), stack-up closes to 40.69

No source excerpt on file for this curb

TOP VIEW · LOOKING DOWN ON THE CURB · TO SCALE

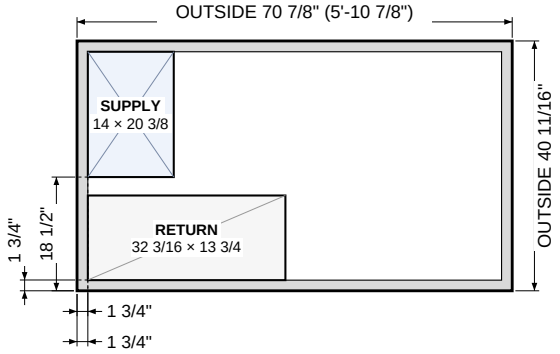

Grey band = curb rail, 1 3/4" wide. Inner line = INSIDE of rail: 67 3/8 × 37 3/16" (outside minus 2 × rail, calculated).
Offsets: from the OUTSIDE left end and the OUTSIDE bottom side of the curb to the opening's near edge. Openings are clear inside sizes.
Measure here: OUTSIDE of the curb rail with a tape; unit end not documented.

York/JCI — VERIFIED
Part # 1RC0456 (14 in) / 1RC0458 (24 in)
OUTSIDE 70 7/8 × 40 11/16" · Height 14 / 24 in · 3-6 T
Ref: x from RIGHT outside end (openings end), y from BACK outside side; x/y offsets derived = 1.75 rail; sup_y derived 1.75+13.781+3.000 (closes to 40.687 O.D.)

SOURCE EXCERPT (left: the cited page of the manufacturer or curb-maker document) beside our TOP VIEW drawing (right, to scale, looking down).
Openings are drawn only where their offsets are documented; offsets run from the OUTSIDE left end and OUTSIDE bottom side. Curb-maker sources are UNVERIFIED.

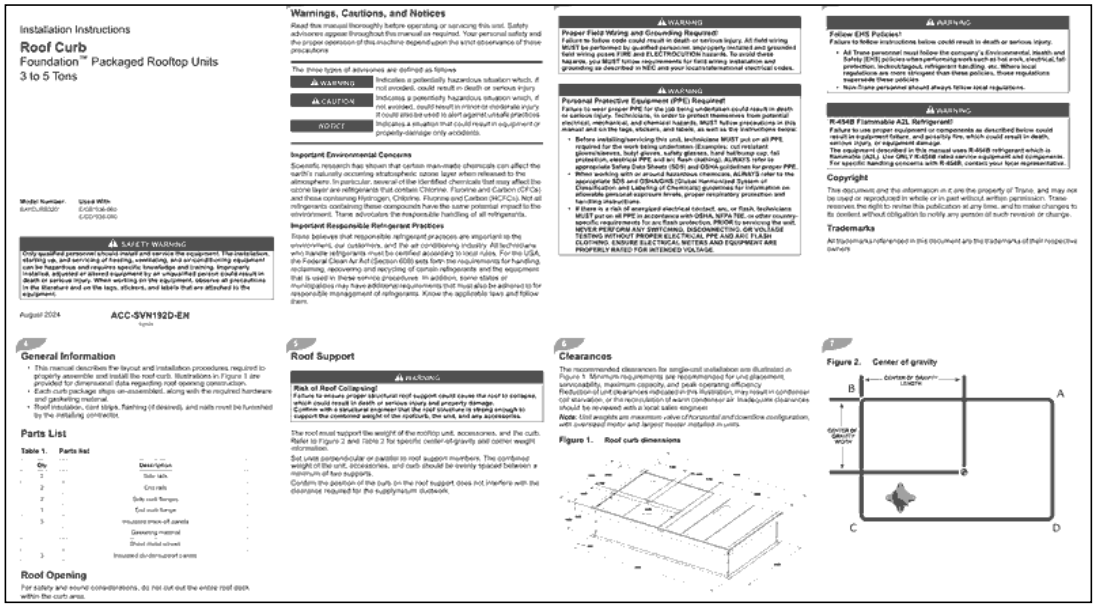
Installation Instructions

Roof Curb
Foundation™ Packaged Rooftop Units
3 to 5 Tons

Warnings, Cautions, and Notices

Important Environmental Concerns

Important Responsible Refrigerant Practices

Copyright

Trademarks

ACC-SVN192D-EN

General Information

Parts List

Roof Opening

Roof Support

Clearances

Figure 1. Roof curb dimensions

Figure 2. Center of gravity

Manufacturer drawing · page 1 · https://elibrary.tranetechnologies.com/public/commercial-hvac/Literature/Installation/ACC-SVN192D-EN_(

TOP VIEW · LOOKING DOWN ON THE CURB · TO SCALE

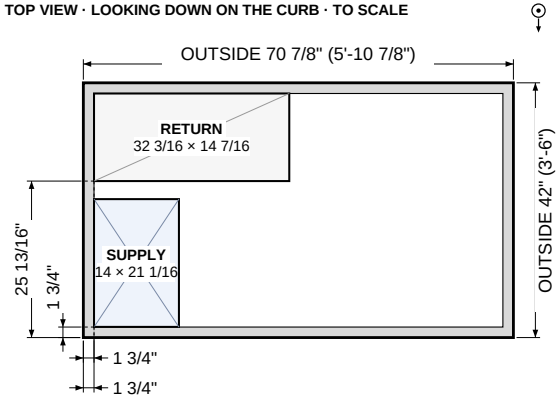

Grey band = curb rail, 1 3/4" wide. Inner line = INSIDE of rail: 67 3/8 × 38 1/2" (outside minus 2 × rail, calculated).

Offsets: from the OUTSIDE left end and the OUTSIDE bottom side of the curb to the opening's near edge. Openings are clear inside sizes.

Measure here: OUTSIDE of the curb rail with a tape; unit end not documented.

Trane/American Standard VERIFIED
Part # BAYCURB320*
OUTSIDE 70 7/8 × 42" · Height 14 in · 3-5 T
Ref: x from outside of the return/supply end rail, y from outside of the long side the supply sits against; derived: rail 1.75 from closing chains; ret_y = 1.75 + 21.06 + 3.0; return runs 32.188 = 14 + 3 + 15.188 along its side

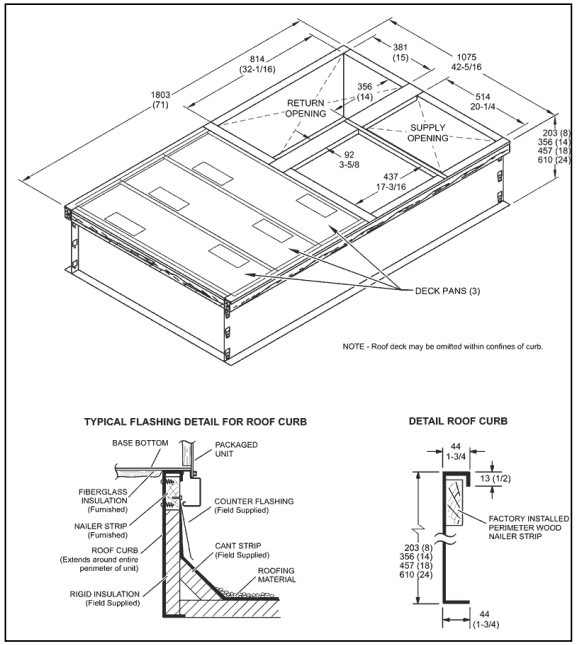

Manufacturer drawing · page 32 · https://tech.lennoxintl.com/C03e7o14l/VIu12Ch2uV/50hz_zga_abox_1805a.pdf

TOP VIEW · LOOKING DOWN ON THE CURB · TO SCALE

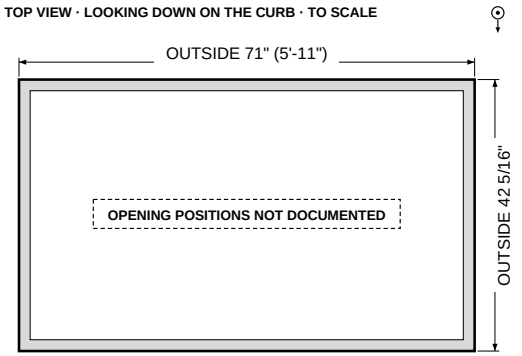

Grey band = curb rail, 1 3/4" wide. Inner line = INSIDE of rail: 67 1/2 × 38 13/16" (outside minus 2 × rail, calculated).

Supply opening 17 3/16 × 20 1/4": size documented, position not documented (not drawn).

Return opening 32 1/16 × 15": size documented, position not documented (not drawn).

Measure here: OUTSIDE of the curb rail with a tape; unit end not documented.

Lennox VERIFIED
Part # Z1CURB70A-1 (8) / 71A-1 (14) / 72A-1 (18) / 73A-1 (24) hybrid
OUTSIDE 71 × 42 5/16" · Height 8, 14, 18, 24 in · 3-6 T
Ref: y from the long side the return sits against: return 15, 3-5/8 member, supply 20-1/4 (sup_y = 1-3/4+15+3-5/8, derived; stack closes within 1/16 of the 42-5/16 outside); both openings at the same end but the offset from the outside end edge is not printed, so x left out; rail 1-3/4 from detail

SOURCE EXCERPT (left: the cited page of the manufacturer or curb-maker document) beside our TOP VIEW drawing (right, to scale, looking down).
Openings are drawn only where their offsets are documented; offsets run from the OUTSIDE left end and OUTSIDE bottom side. Curb-maker sources are UNVERIFIED.

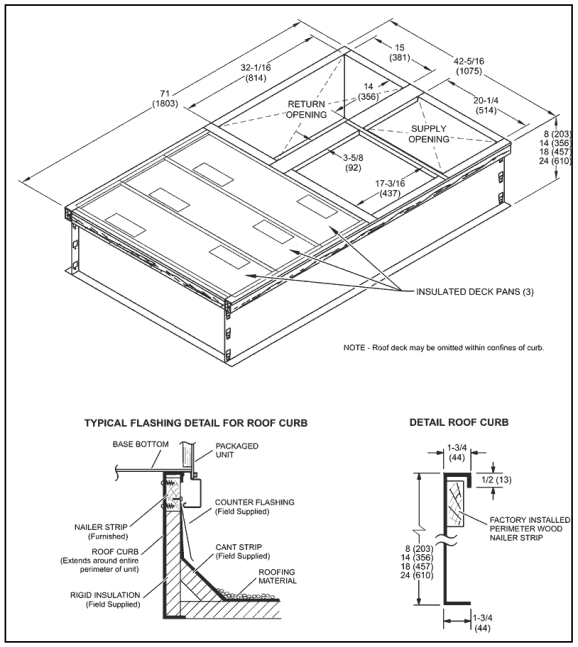

Manufacturer drawing · page 40 · https://s7d9.scene7.com/is/content/AlliedAir/ALLIEDCOMMERCIAL_ZSERIES_ZGD_3-6_R-454B_SPECSHEI

TOP VIEW · LOOKING DOWN ON THE CURB · TO SCALE

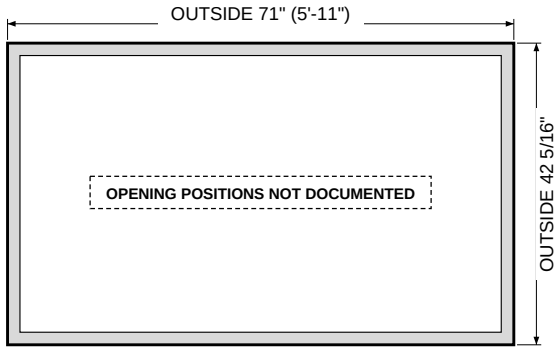

Grey band = curb rail, 1 3/4" wide. Inner line = INSIDE of rail: 67 1/2 × 38 13/16" (outside minus 2 × rail, calculated).
Supply opening 17 3/16 × 20 1/4": size documented, position not documented (not drawn).
Measure here: OUTSIDE of the curb rail with a tape; unit end not documented.

Lennox — VERIFIED
Part # Lennox cat. 11F76 / 11F77 / 11F78 / 11F79 (hybrid downflow curb 8/14/18/24 in)
OUTSIDE 71 × 42 5/16" · Height 8 / 14 / 18 / 24 in · 3-6 T
Ref: supply only (17-3/16 along length, 20-1/4 across, from isometric); return 14/15 labels ambiguous - left out; offsets not dimensioned

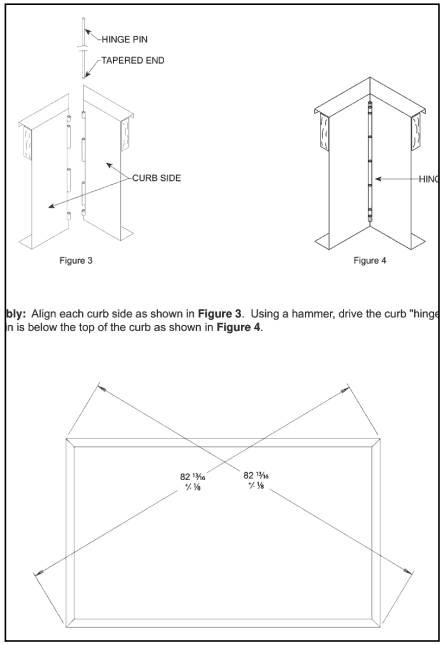

Manufacturer drawing · page 2 · https://fergusonprod.a.bigcontent.io/v1/static/3170691_4569952_installation

TOP VIEW · LOOKING DOWN ON THE CURB · TO SCALE

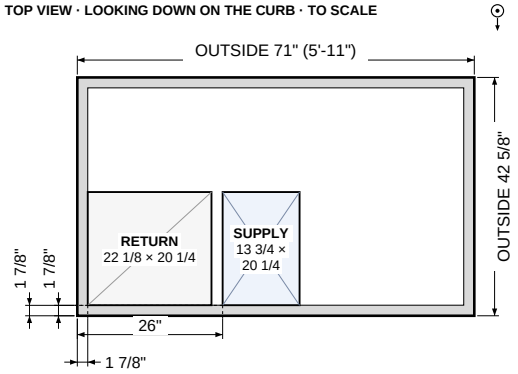

Grey band = curb rail, 1 7/8" wide. Inner line = INSIDE of rail: 67 1/4 × 38 7/8" (outside minus 2 × rail, calculated).
Offsets: from the OUTSIDE left end and the OUTSIDE bottom side of the curb to the opening's near edge. Openings are clear inside sizes.
Measure here: OUTSIDE of the curb rail with a tape; unit end not documented.

Rheem/Ruud — VERIFIED
Part # RXKG-CAD14 / RXKG-CAD24
OUTSIDE 71 × 42 5/8" · Height 14 / 24 in · 3-6 T
Ref: standard 76-1/4 cabinet layout; x from the return end, y from the long side the openings sit against; RMICRB20 top view: A 22-1/8 (return bay), 2 support, supply 13-3/4, B 37-7/8 = 22-1/8+2+13-3/4 (closes); band 20-1/4 + C support 2 + pan band 16-5/8 + 2 rails = 42-5/8 gives rail 1-7/8 (derived, assumes C = 2 like D). Stretch 82-1/4 cabinet: ret_len 27.625, sup_x 31.5 (B 43-3/8). Bays are clear openings; ducts are 1/2 smaller (21-5/8 / 13-1/4 x 19-3/4)

SOURCE EXCERPT (left: the cited page of the manufacturer or curb-maker document) beside our TOP VIEW drawing (right, to scale, looking down).
Openings are drawn only where their offsets are documented; offsets run from the OUTSIDE left end and OUTSIDE bottom side. Curb-maker sources are UNVERIFIED.

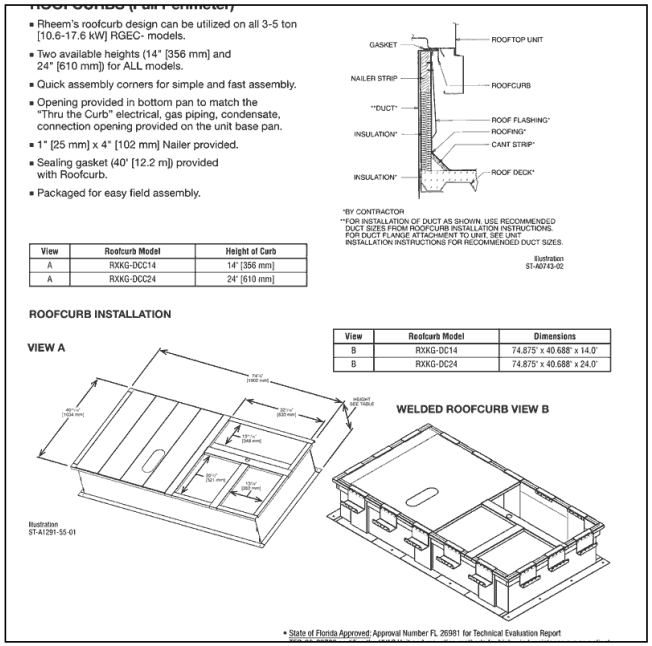

- Rheem's roofcurb design can be utilized on all 3-5 ton [10.6-17.6 kW] RGEC- models.
- Two available heights (14" [356 mm] and 24" [610 mm]) for ALL models.
- Quick assembly corners for simple and fast assembly.
- Opening provided in bottom pan to match the "Thru the Curb" electrical, gas piping, condensate, connection opening provided on the unit base pan.
- 1" [25 mm] x 4" [102 mm] Nailer provided.
- Sealing gasket (40' [12.2 m]) provided with Roofcurb.
- Packaged for easy field assembly.

GASKET · ROOFTOP UNIT · NAILER STRIP · ROOFCURB · "DUCT" · ROOF FLASHING* · ROOFING* · INSULATION* · CANT STRIP* · INSULATION* · ROOF DECK*

*BY CONTRACTOR
**FOR INSTALLATION OF DUCT AS SHOWN, USE RECOMMENDED DUCT SIZES FROM ROOFCURB INSTALLATION INSTRUCTIONS. FOR DUCT FLANGE ATTACHMENT TO UNIT, SEE UNIT INSTALLATION INSTRUCTIONS FOR RECOMMENDED DUCT SIZES.

Illustration ST-A0743-02

View	Roofcurb Model	Height of Curb
A	RXKG-DCC14	14" [356 mm]
A	RXKG-DCC24	24" [610 mm]

ROOFCURB INSTALLATION

VIEW A

View	Roofcurb Model	Dimensions
B	RXKG-DC14	74.875" x 40.688" x 14.0"
B	RXKG-DC24	74.875" x 40.688" x 24.0"

WELDED ROOFCURB VIEW B

Illustration ST-A1291-55-01

* State of Florida Approved; Approval Number FL 26981 for Technical Evaluation Report

Manufacturer drawing · page 56 · https://media.rheem.com/media/uploads/iat/sites/36/2022/08/PR2_R11-873-RGEC.pdf

TOP VIEW · LOOKING DOWN ON THE CURB · TO SCALE

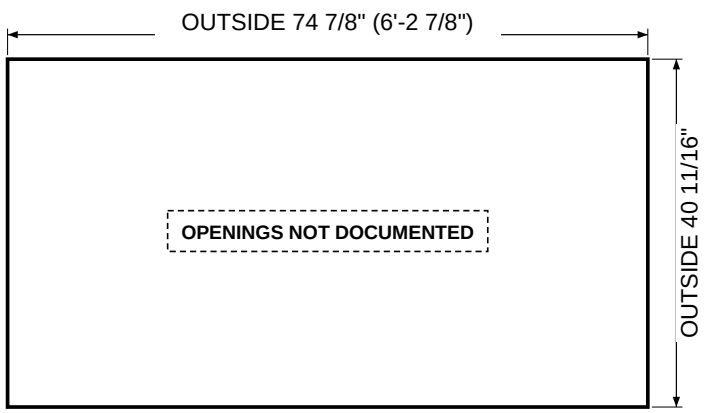

Rail width not documented, so the inside line is not drawn.
Measure here: OUTSIDE of the curb rail with a tape; unit end not documented.

Rheem/Ruud — **VERIFIED**
Part # RXKG-DCC14 / RXKG-DCC24 (welded RXKG-DC14/DC24)
OUTSIDE 74 7/8 × 40 11/16" · Height 14 / 24 in · 3-6 T

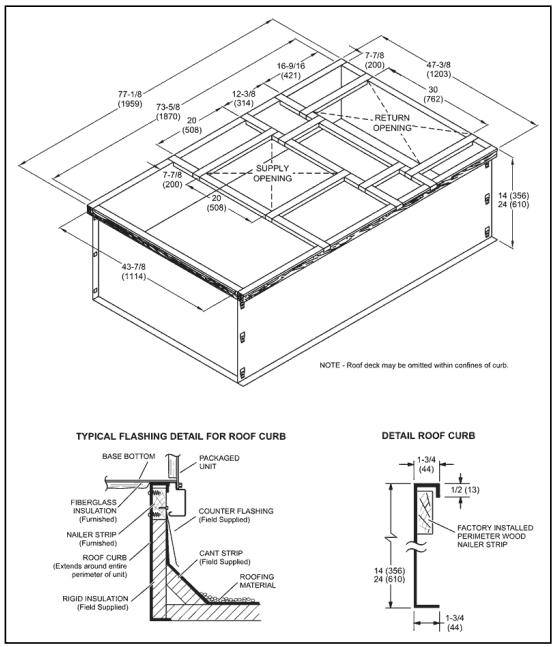

Manufacturer drawing · page 45 · https://www.lennox.com/dA/05afeb0294/ehb_sch_03to20_a2l_2409.pdf

TOP VIEW · LOOKING DOWN ON THE CURB · TO SCALE

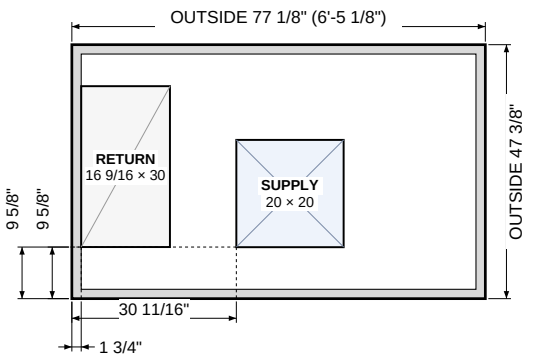

Grey band = curb rail, 1 3/4" wide. Inner line = INSIDE of rail: 73 5/8 × 43 7/8" (outside minus 2 × rail, calculated).
Offsets: from the OUTSIDE left end and the OUTSIDE bottom side of the curb to the opening's near edge. Openings are clear inside sizes.
Measure here: OUTSIDE of the curb rail with a tape; unit end not documented.

Lennox — **VERIFIED**
Part # 11F70 (14 in) / 11F71 (24 in) hybrid downflow
OUTSIDE 77 1/8 × 47 3/8" · Height 14 / 24 in · 3-5 T
Ref: x from the return end's outside edge, y from the side the 7-7/8 offsets are dimensioned from; derived: return against inner end rail (1.75 rail), offsets taken from inside face of rail as on the LGE plan view of the same frame; sup_x = 1.75+16.5625+12.375

SOURCE EXCERPT (left: the cited page of the manufacturer or curb-maker document) beside our TOP VIEW drawing (right, to scale, looking down).
Openings are drawn only where their offsets are documented; offsets run from the OUTSIDE left end and OUTSIDE bottom side. Curb-maker sources are UNVERIFIED.

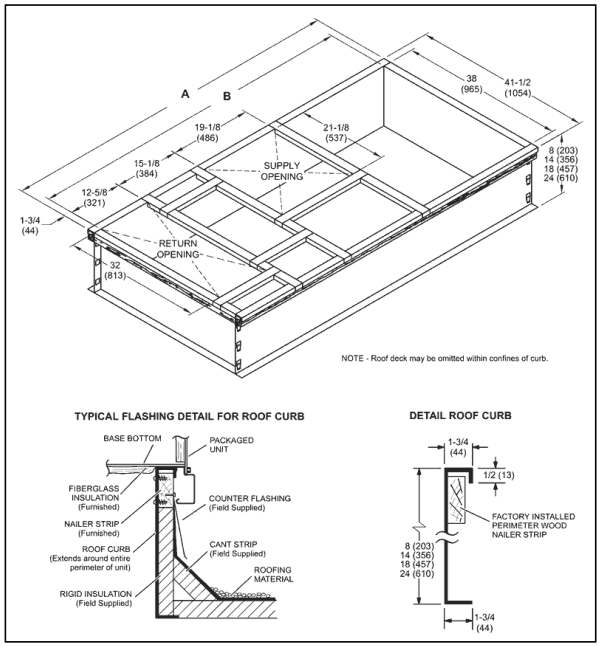

Manufacturer drawing · page 38 · https://lockeproductionblob.blob.core.windows.net/storage/products/attachments/2020/01/15/a8c6ed32:

TOP VIEW · LOOKING DOWN ON THE CURB · TO SCALE

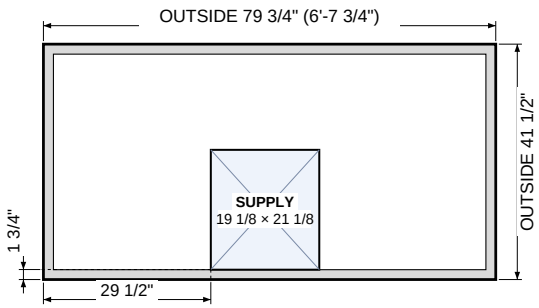

Grey band = curb rail, 1 3/4" wide. Inner line = INSIDE of rail: 76 1/4 × 38" (outside minus 2 × rail, calculated).
Offsets: from the OUTSIDE left end and the OUTSIDE bottom side of the curb to the opening's near edge. Openings are clear inside sizes.
Return opening 15 1/8 × 32": size documented, position not documented (not drawn).
Measure here: OUTSIDE of the curb rail with a tape; unit end not documented.

Lennox — **VERIFIED**
Part # C1CURB70A-1 (8) / 71A-1 (14) / 72A-1 (18) / 73A-1 (24) hybrid downflow; C1CURB55AT1 adjustable pitch 14
OUTSIDE 79 3/4 × 41 1/2" · Height 8, 14, 18, 24 in · 3-6 T
Ref: x from return end: rail 1-3/4 + 12-5/8 (derived) to return, return 15-1/8, supply 19-1/8 follows in chain; sup_y from the far long side; same layout as T-Class drawing, read from KGA p38 text chain

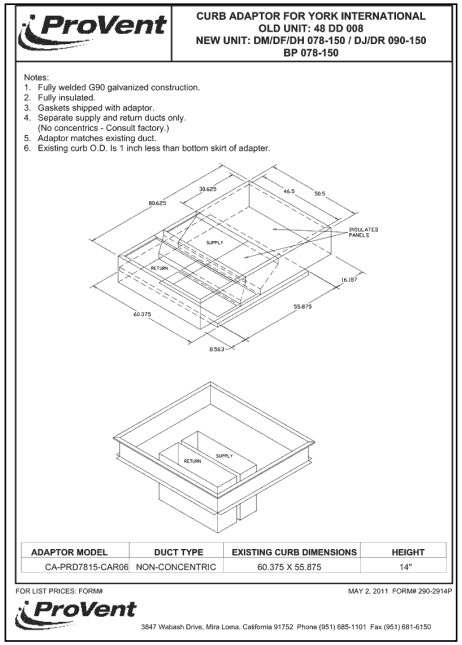

Curb-maker drawing (UNVERIFIED) · page 1 · https://www.proventusa.com/-/media/provent/catalog/pdf/york-curb-adapters/curb/predat

TOP VIEW · LOOKING DOWN ON THE CURB · TO SCALE

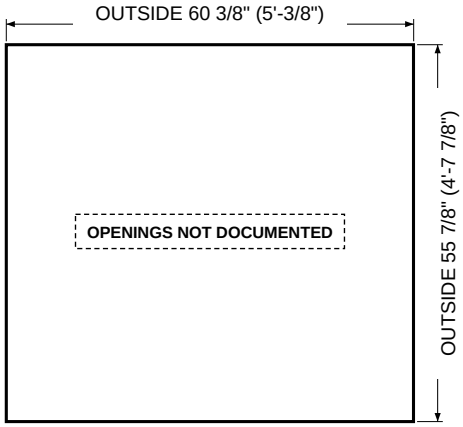

Rail width not documented, so the inside line is not drawn.
Measure here: OUTSIDE of the curb rail with a tape; unit end not documented.

Carrier/Bryant/ICP — **UNVERIFIED**
Part # factory curb no. not found (existing-curb size from ProVent CA-PRD7815-CAR06)
OUTSIDE 60 3/8 × 55 7/8" · Height 14 in · Tons 7.5-8.5 T · legacy

SOURCE EXCERPT (left: the cited page of the manufacturer or curb-maker document) beside our TOP VIEW drawing (right, to scale, looking down).
Openings are drawn only where their offsets are documented; offsets run from the OUTSIDE left end and OUTSIDE bottom side. Curb-maker sources are UNVERIFIED.

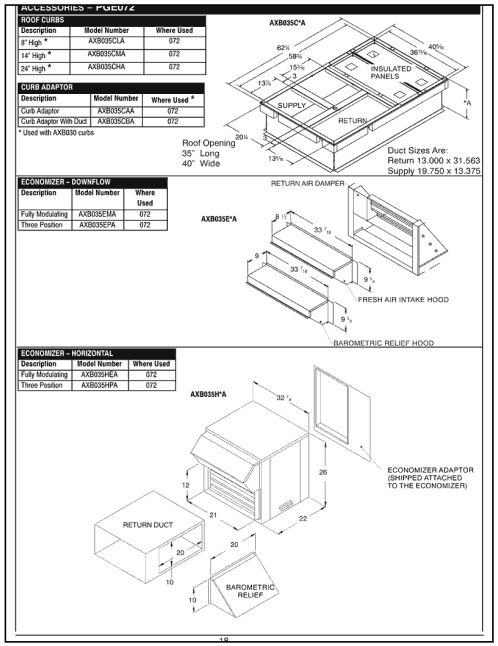

ACCESSORIES – PGE072

ROOF CURBS

Description	Model Number	Where Used
8" High *	AXB035CLA	072
14" High *	AXB035CMA	072
24" High *	AXB035CHA	072

CURB ADAPTOR

Description	Model Number	Where Used *
Curb Adaptor	AXB035CAA	072
Curb Adaptor With Duct	AXB035CBA	072

* Used with AXB030 curbs

AXB035C*A

ECONOMIZER – DOWNFLOW

Description	Model Number	Where Used
Fully Modulating	AXB035EMA	072
Three Position	AXB035EPA	072

AXB035E*A

ECONOMIZER – HORIZONTAL

Description	Model Number	Where Used
Fully Modulating	AXB035HEA	072
Three Position	AXB035HPA	072

AXB035H*A

Manufacturer drawing · page 18 · https://www.shareddocs.com/hvac/docs/1011/Public/01/50941210201_ICP_11668.pdf

TOP VIEW · LOOKING DOWN ON THE CURB · TO SCALE

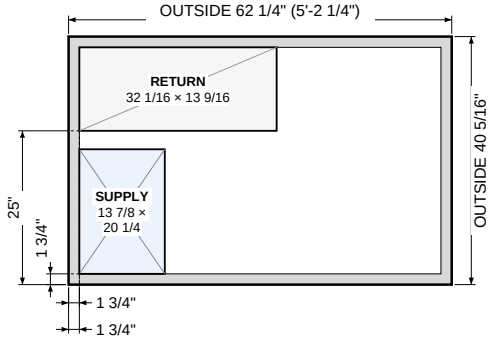

Grey band = curb rail, 1 3/4" wide. Inner line = INSIDE of rail: 58 3/4 × 36 13/16" (outside minus 2 × rail, calculated).

Offsets: from the OUTSIDE left end and the OUTSIDE bottom side of the curb to the opening's near edge. Openings are clear inside sizes.

Measure here: OUTSIDE of the curb rail with a tape; unit end not documented.

Carrier/Bryant/ICP VERIFIED

Part # AXB035CLA (8 in) / AXB035CMA (14 in) / AXB035CHA (24 in); curb adaptor AXB035CAA/CBA (adapts to older AXB030 curbs)

OUTSIDE 62 1/4 × 40 5/16" · Height 8, 14, 24 in · Tons 6 T · legacy

Ref: curb opening bands (duct sizes printed slightly smaller: supply 19.750 x 13.375, return 13.000 x 31.563); x from the outside of the opening end, y from the supply side; rail derived (62-1/4 - 58-3/4)/2; across 20-1/4 + 3 + 13-9/16 = 36-13/16 inside (closes); ret_len derived 13-7/8 + 3 + 15-3/16

Notes:
1. **Adapters are welded, insulated, and totally sealed.**
2. **Adapters have duct transitions for ducted systems (not concentric).**
3. **Submittal drawings are available.**
4. **"New" adapters are not designed but are available. Part numbers will be as they are developed.**
5. **Consult RSI for concentric duct applications.**
6. **Field information may be required before production of adapters.**
7. **Units with different color text have multiple size curbs. Verify correct curb.**

Bryant, Day and Night, and Payne

Unit Model No.	Curb L	x W	Curb Model	Notes	Footprint Code
579C 048-060	81.13	45.56	70849D01	Bottom discharge curb.	RSLR
579C 090-150	84.44	60.63	70849DA2	Bottom discharge curb.	PRLM
579C 180	102.38	69.63	70849DA3	Bottom discharge curb.	PRLM
579C 240	150.00	69.38	70849D04	Bottom discharge curb.	VLRL
579C 300-360	164.75	69.38	70849D05	Bottom discharge curb.	VLRL
579D 036-060	69.13	36.50	309427-101	Bottom discharge curb.	SERL
579D 090	80.56	60.75	307175-102	Bottom discharge curb.	SERL
579D 120-180	77.75	74.50	308450-201	Bottom discharge curb.	PRLM
579E 240-300	77.75	70.56	50PQ900221	Bottom discharge curb.	PRLM
579E-G048125-060	70.50	62.50	304851-304	Bottom discharge curb.	SRSE
580B 036-072	70.88	46.56	314213-201	Bottom discharge curb.	SRSE
580B 090-120	81.75	59.38	389004-201	Bottom discharge curb.	SRSE
580C-D 036-072	70.88	40.69	389028-201	Bottom discharge curb.	SRSE
585A 018-024	54.50	43.75	301585-301	Bottom discharge curb.	SRSE
585A 024-036	64.50	43.75	301585-302	Bottom discharge curb.	SRSE
585A 048-060	70.50	57.75	301585-303	Bottom discharge curb.	SRSE
585A 048-060	70.50	66.00	301585-304	Bottom discharge curb.	SRSE
585C 018050-036075	64.00	51.25	72-24-02	Stiles Corp. made curb.	SRSE
585C 036125-060150	77.00	51.25	72-24-03	Stiles Corp. made curb.	SRSE
585C 090	90.00	55.00	DPPC-008DG	Stiles Corp. made curb.	RDSL
585C 090-150	81.75	53.50	389028-203	Bottom discharge curb.	SRSE
585E 090	80.56	60.75	307175-102	Bottom discharge curb.	SERL
585E-G 018-036075	59.50	50.50	304851-303	Bottom discharge curb.	SRSE
585E-G048125-060	70.50	62.50	304851-304	Bottom discharge curb.	SRSE

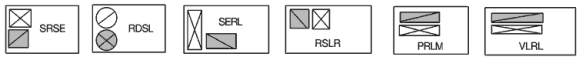

Curb-maker drawing (UNVERIFIED) · page 2 · https://www.ruskinrooftopsystems.com/Portals/5/bdp_web_adapters.pdf

TOP VIEW · LOOKING DOWN ON THE CURB · TO SCALE

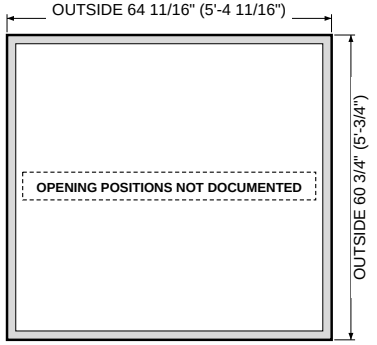

Grey band = curb rail, 1 3/4" wide. Inner line = INSIDE of rail: 61 3/16 × 57 1/4" (outside minus 2 × rail, calculated).

Supply opening 39 7/8 × 26 11/16": size documented, position not documented (not drawn).

Return opening 39 7/8 × 26 11/16": size documented, position not documented (not drawn).

Measure here: OUTSIDE of the curb rail with a tape; unit end not documented.

Carrier/Bryant/ICP CALCULATED

Part # 307175-103 / 307175-105

OUTSIDE 64 11/16 × 60 3/4" · Height 14 / 24 in · Tons 7.5-8.5 T · legacy

Ref: Bryant Fig. 1 (559/599D090,102): openings 39 7/8 x 26 11/16 each, side by side across the width, 3 in divider, 7/16 from the inside of the 1 3/4 rails; offsets along the length not legible, so placement is drawn dashed

SOURCE EXCERPT (left: the cited page of the manufacturer or curb-maker document) beside our TOP VIEW drawing (right, to scale, looking down).
Openings are drawn only where their offsets are documented; offsets run from the OUTSIDE left end and OUTSIDE bottom side. Curb-maker sources are UNVERIFIED.

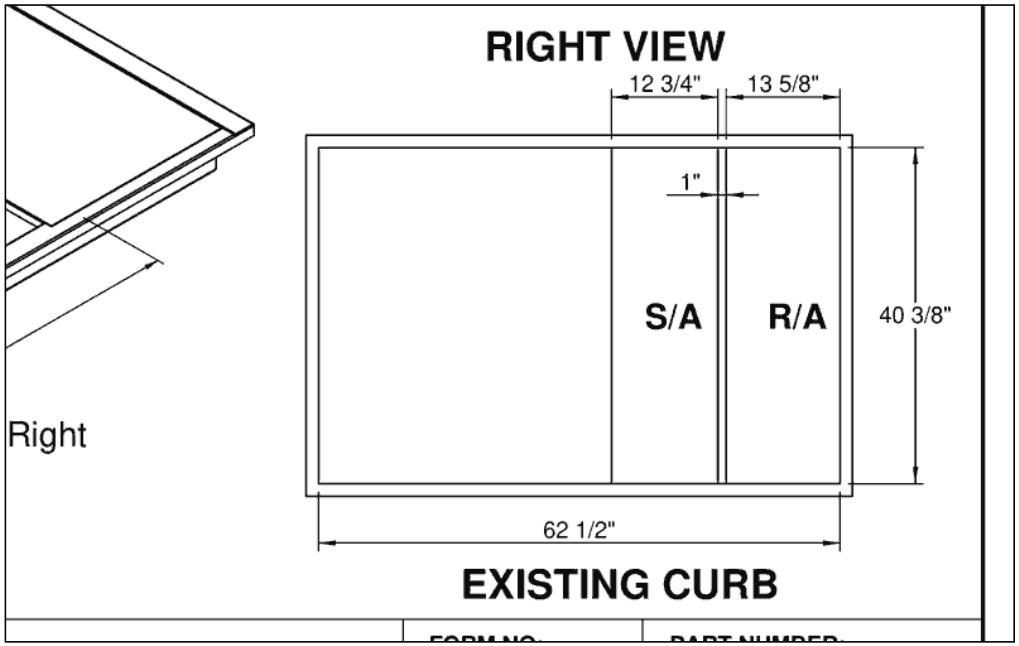

Curb-maker drawing (UNVERIFIED) · page 1 · https://www.proventusa.com/-/media/provent/catalog/pdf/york-curb-adapters/curb/predatc

TOP VIEW · LOOKING DOWN ON THE CURB · TO SCALE

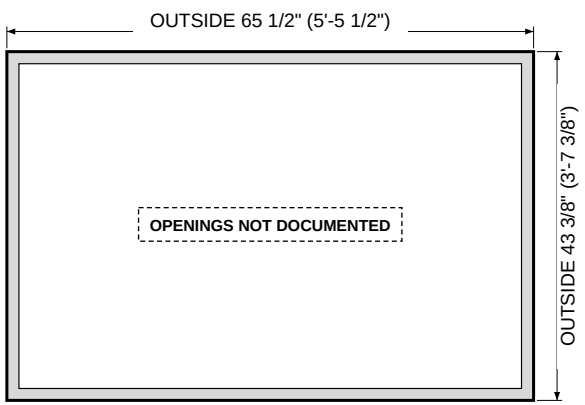

Grey band = curb rail, 1 1/2" wide. Inner line = INSIDE of rail: 62 1/2 × 40 3/8" (outside minus 2 × rail, calculated).
Measure here: OUTSIDE of the curb rail with a tape; unit end not documented.

Trane/American Standard CALCULATED
Part # (factory curb part unknown)
OUTSIDE 65 1/2 × 43 3/8" · Tons 8.3, 8.5 T · legacy
Ref: calc: printed existing-curb INSIDE 62.5 x 40.375 + 2 x 1-1/2 rail (rail as printed on ProVent TRN16)

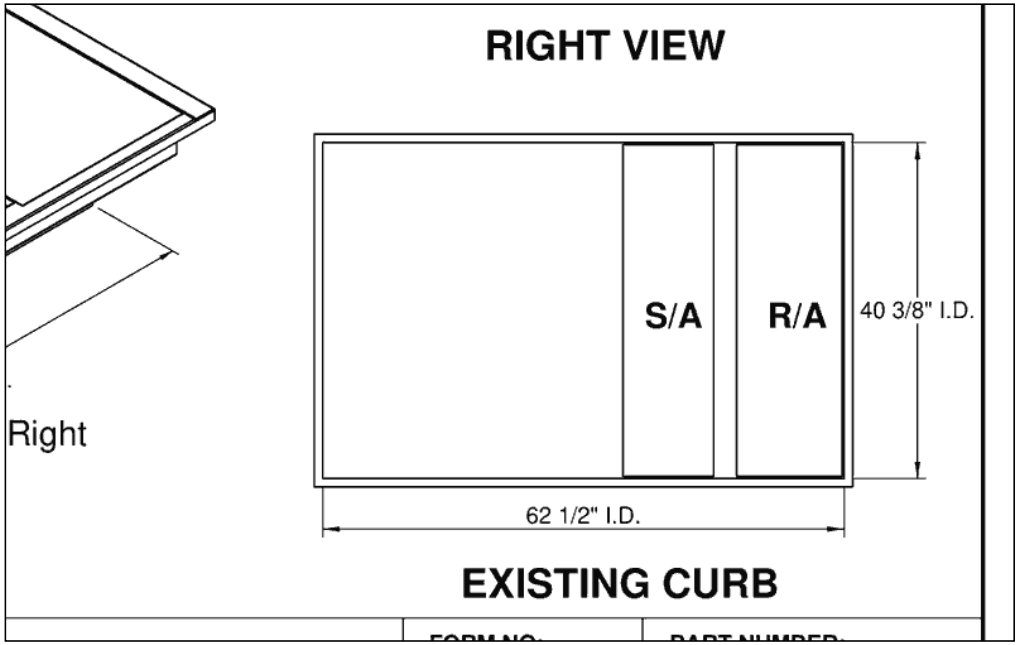

Curb-maker drawing (UNVERIFIED) · page 1 · https://www.proventusa.com/-/media/provent/catalog/pdf/york-curb-adapters/curb/predatc

TOP VIEW · LOOKING DOWN ON THE CURB · TO SCALE

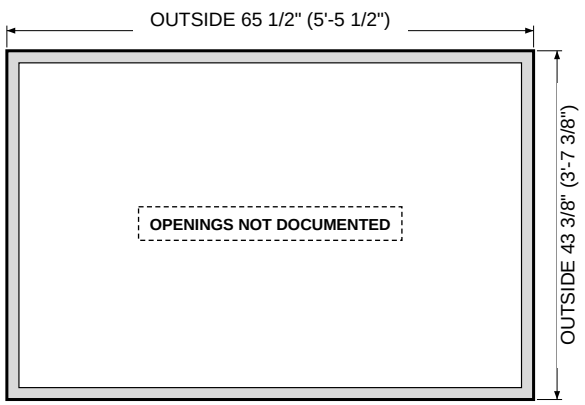

Grey band = curb rail, 1 1/2" wide. Inner line = INSIDE of rail: 62 1/2 × 40 3/8" (outside minus 2 × rail, calculated).
Measure here: OUTSIDE of the curb rail with a tape; unit end not documented.

Trane/American Standard CALCULATED
Part # (factory curb part unknown)
OUTSIDE 65 1/2 × 43 3/8" · Tons 7.5, 8.5 T · legacy
Ref: calc: printed existing-curb INSIDE 62.5 x 40.375 + 2 x 1-1/2 rail (rail as printed on ProVent TRN16)

SOURCE EXCERPT (left: the cited page of the manufacturer or curb-maker document) beside our TOP VIEW drawing (right, to scale, looking down).
Openings are drawn only where their offsets are documented; offsets run from the OUTSIDE left end and OUTSIDE bottom side. Curb-maker sources are UNVERIFIED.

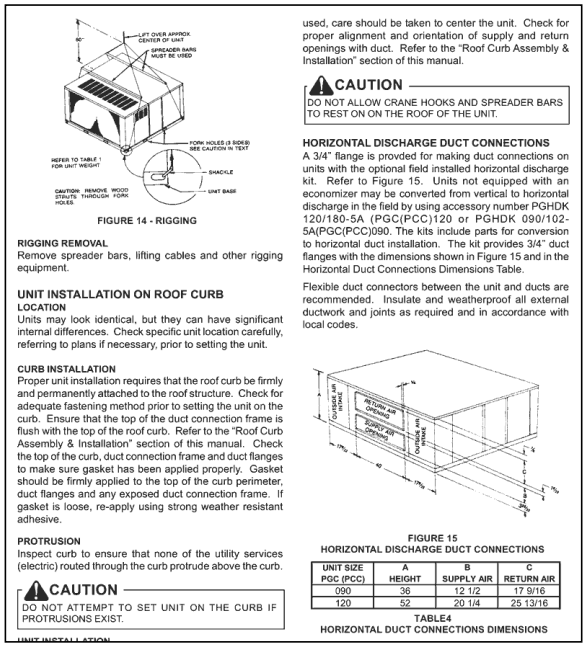

FIGURE 14 - RIGGING

RIGGING REMOVAL
Remove spreader bars, lifting cables and other rigging equipment.

UNIT INSTALLATION ON ROOF CURB
LOCATION
Units may look identical, but they can have significant internal differences. Check specific unit location carefully, referring to plans if necessary, prior to setting the unit.

CURB INSTALLATION
Proper unit installation requires that the roof curb be firmly and permanently attached to the roof structure. Check for adequate fastening method prior to setting the unit on the curb. Ensure that the top of the duct connection frame is flush with the top of the roof curb. Refer to the "Roof Curb Assembly & Installation" section of this manual. Check the top of the curb, duct connection frame and duct flanges to make sure gasket has been applied properly. Gasket should be firmly applied to the top of the curb perimeter, duct flanges and any exposed duct connection frame. If gasket is loose, re-apply using strong weather resistant adhesive.

PROTRUSION
Inspect curb to ensure that none of the utility services (electric) routed through the curb protrude above the curb.

CAUTION
DO NOT ATTEMPT TO SET UNIT ON THE CURB IF PROTRUSIONS EXIST.

used, care should be taken to center the unit. Check for proper alignment and orientation of supply and return openings with duct. Refer to the "Roof Curb Assembly & Installation" section of this manual.

CAUTION
DO NOT ALLOW CRANE HOOKS AND SPREADER BARS TO REST ON ON THE ROOF OF THE UNIT.

HORIZONTAL DISCHARGE DUCT CONNECTIONS
A 3/4" flange is provded for making duct connections on units with the optional field installed horizontal discharge kit. Refer to Figure 15. Units not equipped with an economizer may be converted from vertical to horizontal discharge in the field by using accessory number PGHDK 120/180-5A (PGC(PCC)120 or PGHDK 090/102-5A(PGC(PCC)090. The kits include parts for conversion to horizontal duct installation. The kit provides 3/4" duct flanges with the dimensions shown in Figure 15 and in the Horizontal Duct Connections Dimensions Table.

Flexible duct connectors between the unit and ducts are recommended. Insulate and weatherproof all external ductwork and joints as required and in accordance with local codes.

FIGURE 15
HORIZONTAL DISCHARGE DUCT CONNECTIONS

UNIT SIZE PGC (PCC)	A HEIGHT	B SUPPLY AIR	C RETURN AIR
090	36	12 1/2	17 9/16
120	52	20 1/4	25 13/16

TABLE4
HORIZONTAL DUCT CONNECTIONS DIMENSIONS

Manufacturer drawing · page 12 · http://igate.northernplumbing.com/manuals/goodman/pgc.pdf

TOP VIEW · LOOKING DOWN ON THE CURB · TO SCALE

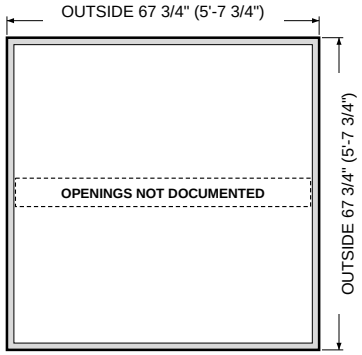

Grey band = curb rail, 1 1/2" wide. Inner line = INSIDE of rail: 64 3/4 × 64 3/4" (outside minus 2 × rail, calculated).
Opening sizes are in the list; their positions are not documented, so none are drawn.
Measure here: OUTSIDE of the curb rail with a tape; unit end not documented.

Daikin/Goodman/Amana — UNVERIFIED
Part # PGC-5
OUTSIDE 67 3/4 × 67 3/4" · Height 13.75 (+2 flange per McDaniel) in · 7.5-15 T · legacy
Also OUTSIDE (ProVent O.D.) 68 1/16 × 68 1/16"
Ref: sizes only: two 42.0 x 19.75 openings side by side with a 3.0 support (McDaniel p.9); neither drawing labels which is supply vs return, so sup/ret keys left out

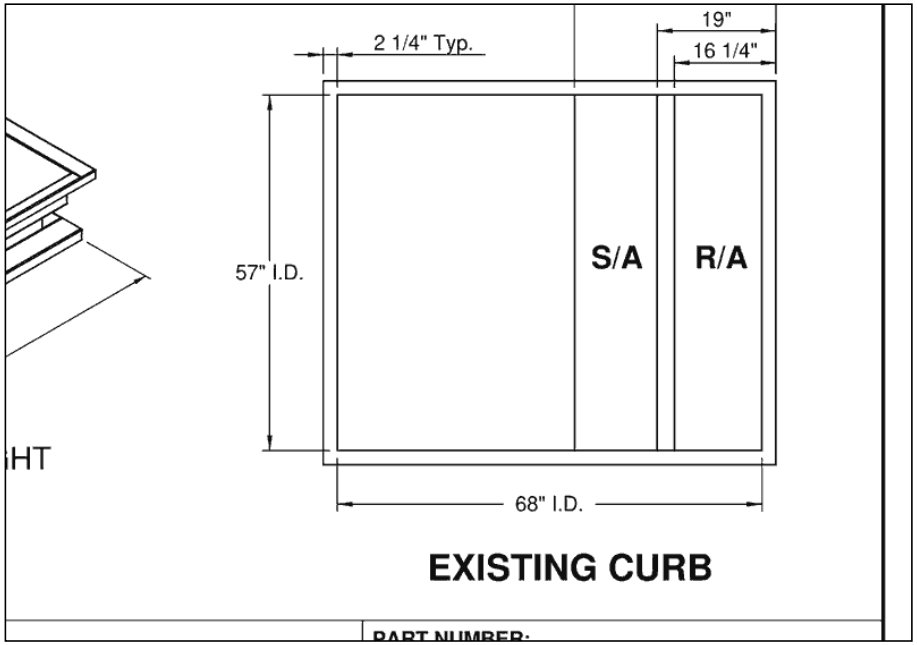

Curb-maker drawing (UNVERIFIED) · page 1 · https://www.proventusa.com/-/media/provent/catalog/pdf/york-curb-adapters/curb/predator

TOP VIEW · LOOKING DOWN ON THE CURB · TO SCALE

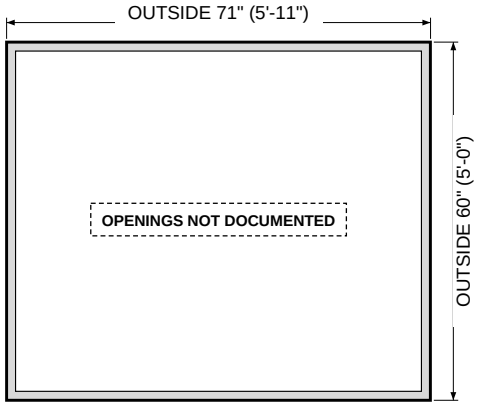

Grey band = curb rail, 1 1/2" wide. Inner line = INSIDE of rail: 68 × 57" (outside minus 2 × rail, calculated).
Measure here: OUTSIDE of the curb rail with a tape; unit end not documented.

Trane/American Standard — CALCULATED
Part # (factory curb part unknown)
OUTSIDE 71 × 60" · Tons 10, 12.5, 12.5-14 T · legacy
Ref: calc: printed existing-curb INSIDE 68 x 57 + 2 x 1-1/2 rail (rail as printed on ProVent TRN16)

SOURCE EXCERPT (left: the cited page of the manufacturer or curb-maker document) beside our TOP VIEW drawing (right, to scale, looking down).
Openings are drawn only where their offsets are documented; offsets run from the OUTSIDE left end and OUTSIDE bottom side. Curb-maker sources are UNVERIFIED.

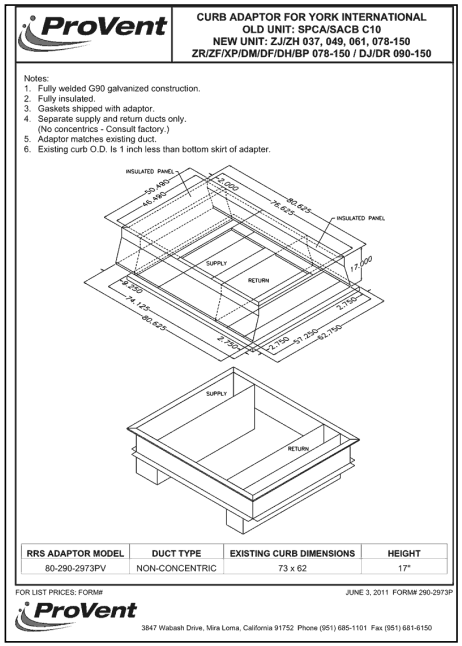

ProVent

CURB ADAPTOR FOR YORK INTERNATIONAL
OLD UNIT: SPCA/SACB C10
NEW UNIT: ZJ/ZH 037, 049, 061, 078-150
ZR/ZF/XP/DM/DF/DH/BP 078-150 / DJ/DR 090-150

Notes:
1. Fully welded G90 galvanized construction.
2. Fully insulated.
3. Gaskets shipped with adaptor.
4. Separate supply and return ducts only. (No concentrics - Consult factory.)
5. Adaptor matches existing duct.
6. Existing curb O.D. is 1 inch less than bottom skirt of adapter.

INSULATED PANEL
SUPPLY
RETURN

RRS ADAPTOR MODEL	DUCT TYPE	EXISTING CURB DIMENSIONS	HEIGHT
80-290-2973PV	NON-CONCENTRIC	73 x 62	17"

FOR LIST PRICES: FORM# JUNE 3, 2011 FORM# 290-2973P

ProVent
3847 Wabash Drive, Mira Loma, California 91752 Phone (951) 685-1101 Fax (951) 681-6150

Curb-maker drawing (UNVERIFIED) · page 1 · https://www.proventusa.com/-/media/provent/catalog/pdf/york-curb-adapters/curb/preda

TOP VIEW · LOOKING DOWN ON THE CURB · TO SCALE

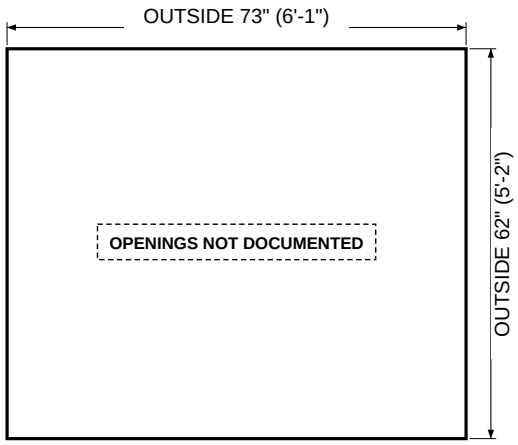

Rail width not documented, so the inside line is not drawn.
Measure here: OUTSIDE of the curb rail with a tape; unit end not documented.

Trane/American Standard — UNVERIFIED
Part # (factory curb part unknown)
OUTSIDE 73 × 62" · Tons 10 T · legacy

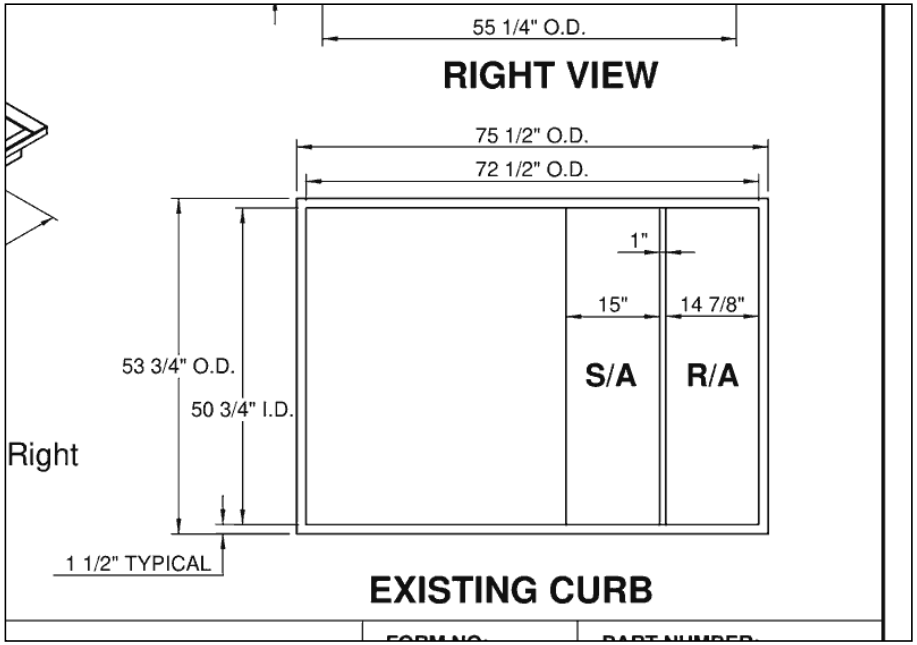

Curb-maker drawing (UNVERIFIED) · page 1 · https://www.proventusa.com/-/media/provent/catalog/pdf/york-curb-adapters/curb/predator

TOP VIEW · LOOKING DOWN ON THE CURB · TO SCALE

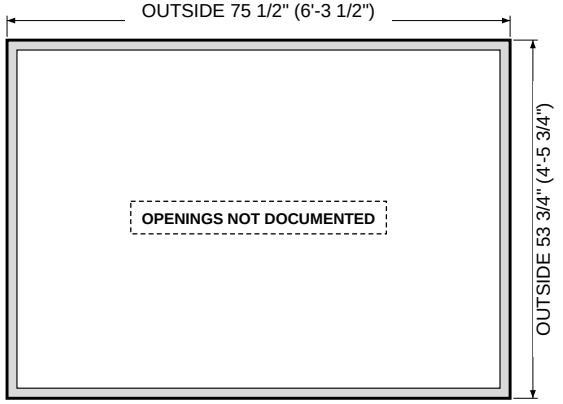

Grey band = curb rail, 1 1/2" wide. Inner line = INSIDE of rail: 72 1/2 × 50 3/4" (outside minus 2 × rail, calculated).
Measure here: OUTSIDE of the curb rail with a tape; unit end not documented.

Trane/American Standard — UNVERIFIED
Part # (factory curb part unknown)
OUTSIDE 75 1/2 × 53 3/4" · Tons 10-10.8, 11 T · legacy
Ref: existing curb O.D. 75-1/2 x 53-3/4, I.D. 72-1/2 x 50-3/4, 1-1/2 rails (ProVent TRN16)

SOURCE EXCERPT (left: the cited page of the manufacturer or curb-maker document) beside our TOP VIEW drawing (right, to scale, looking down).
Openings are drawn only where their offsets are documented; offsets run from the OUTSIDE left end and OUTSIDE bottom side. Curb-maker sources are UNVERIFIED.

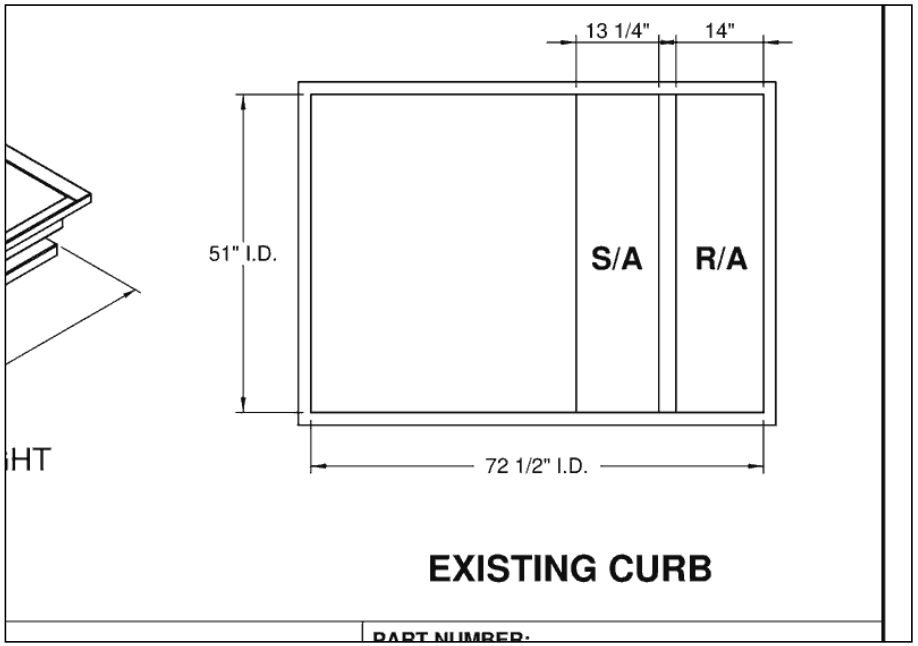

Curb-maker drawing (UNVERIFIED) · page 1 · https://www.proventusa.com/-/media/provent/catalog/pdf/york-curb-adapters/curb/predator

TOP VIEW · LOOKING DOWN ON THE CURB · TO SCALE

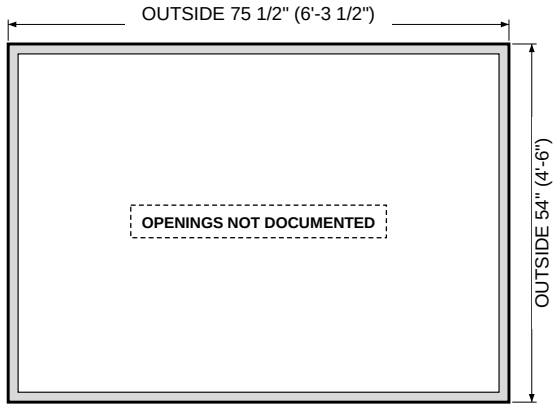

Grey band = curb rail, 1 1/2" wide. Inner line = INSIDE of rail: 72 1/2 × 51" (outside minus 2 × rail, calculated).
Measure here: OUTSIDE of the curb rail with a tape; unit end not documented.

Trane/American Standard — CALCULATED
Part # (factory curb part unknown)
OUTSIDE 75 1/2 × 54" · Tons 10 T · legacy
Ref: calc: printed existing-curb INSIDE 72.5 x 51 + 2 x 1-1/2 rail (rail as printed on ProVent TRN16)

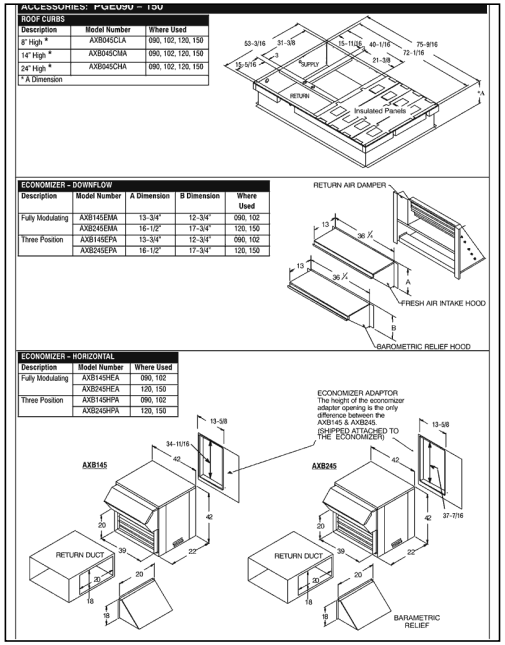

Manufacturer drawing · page 23 · https://www.shareddocs.com/hvac/docs/1011/Public/01/50941210201_ICP_11668.pdf

TOP VIEW · LOOKING DOWN ON THE CURB · TO SCALE

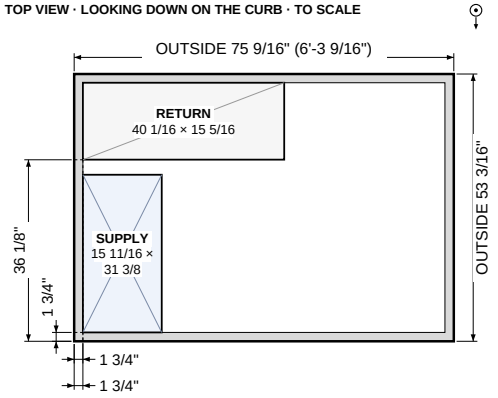

Grey band = curb rail, 1 3/4" wide. Inner line = INSIDE of rail: 72 1/16 × 49 11/16" (outside minus 2 × rail, calculated).
Offsets: from the OUTSIDE left end and the OUTSIDE bottom side of the curb to the opening's near edge. Openings are clear inside sizes.
Measure here: OUTSIDE of the curb rail with a tape; unit end not documented.

Carrier/Bryant/ICP — VERIFIED
Part # AXB045CLA (8 in) / AXB045CMA (14 in) / AXB045CHA (24 in)
OUTSIDE 75 9/16 × 53 3/16" · Height 8, 14, 24 in · Tons 7.5-12.5 T · legacy
Ref: x from the outside of the opening end, y from the outside of the supply (back) side; rail derived (75-9/16 - 72-1/16)/2 = 1.75; ret_y derived 1.75+31.375+3; across stack closes to 53-3/16, along stack 15-11/16+3+21-3/8 = 40-1/16 closes

SOURCE EXCERPT (left: the cited page of the manufacturer or curb-maker document) beside our TOP VIEW drawing (right, to scale, looking down).
Openings are drawn only where their offsets are documented; offsets run from the OUTSIDE left end and OUTSIDE bottom side. Curb-maker sources are UNVERIFIED.

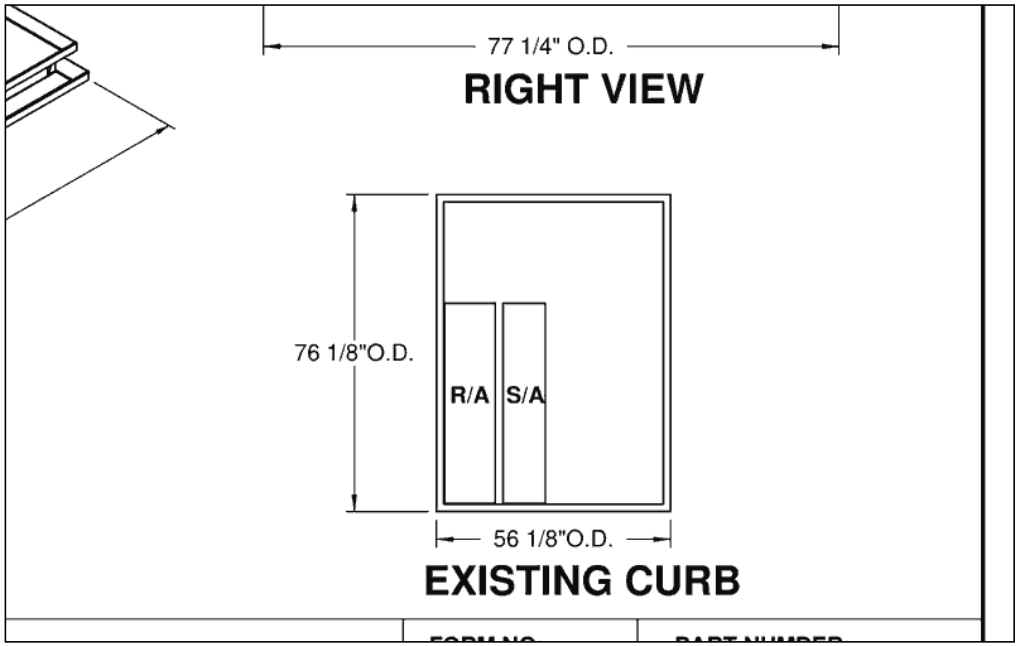

Curb-maker drawing (UNVERIFIED) · page 1 · https://www.proventusa.com/-/media/provent/catalog/pdf/york-curb-adapters/curb/predat

TOP VIEW · LOOKING DOWN ON THE CURB · TO SCALE

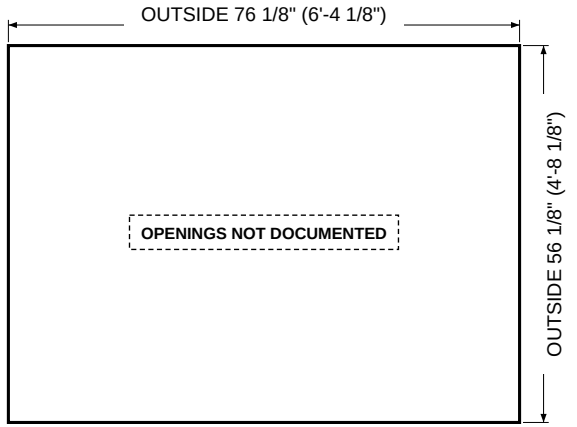

Rail width not documented, so the inside line is not drawn.
Measure here: OUTSIDE of the curb rail with a tape; unit end not documented.

Carrier/Bryant/ICP — UNVERIFIED
Part # factory curb no. not found (existing-curb size from ProVent CA-PRD7815-CAR07)
OUTSIDE 76 1/8 × 56 1/8" · Tons 10 T · legacy

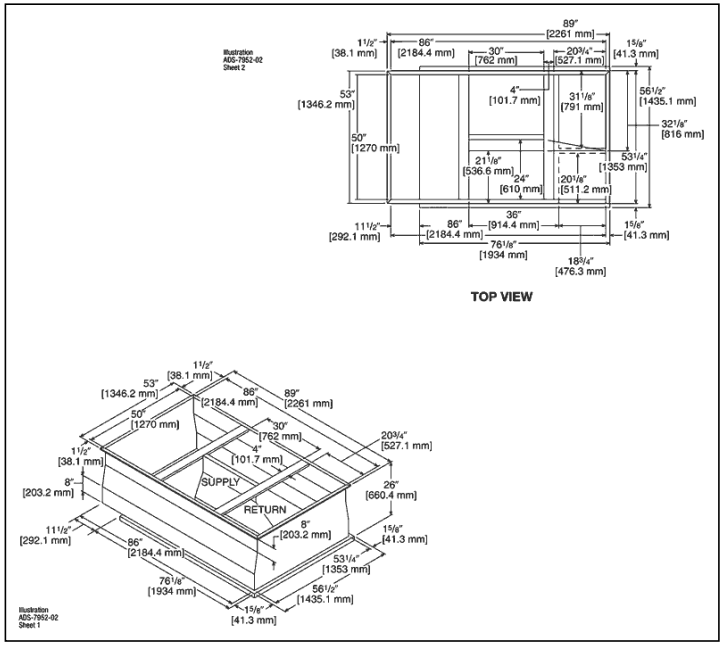

Manufacturer drawing · page 41 · https://resource.gemaire.com/is/content/Watscocom/Gemaire/rheem_rkkl-b090dl15e_article_13745:

TOP VIEW · LOOKING DOWN ON THE CURB · TO SCALE

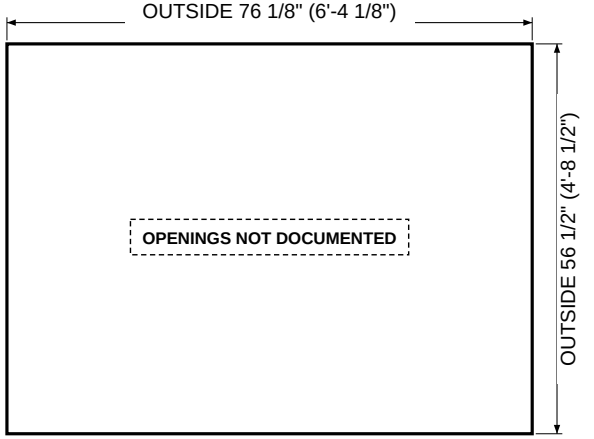

Rail width not documented, so the inside line is not drawn.
Measure here: OUTSIDE of the curb rail with a tape; unit end not documented.

Rheem/Ruud — UNVERIFIED
Part # RXRK-E50
OUTSIDE 76 1/8 × 56 1/2" · legacy

SOURCE EXCERPT (left: the cited page of the manufacturer or curb-maker document) beside our TOP VIEW drawing (right, to scale, looking down).
Openings are drawn only where their offsets are documented; offsets run from the OUTSIDE left end and OUTSIDE bottom side. Curb-maker sources are UNVERIFIED.

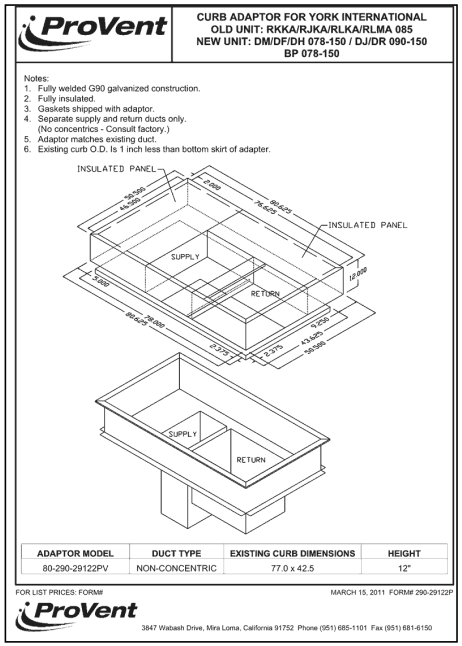

ProVent

CURB ADAPTOR FOR YORK INTERNATIONAL
OLD UNIT: RKKA/RJKA/RLKA/RLMA 085
NEW UNIT: DM/DF/DH 078-150 / DJ/DR 090-150
BP 078-150

Notes:
1. Fully welded G90 galvanized construction.
2. Fully insulated.
3. Gaskets shipped with adaptor.
4. Separate supply and return ducts only. (No concentrics - Consult factory.)
5. Adaptor matches existing duct.
6. Existing curb O.D. is 1 inch less than bottom skirt of adapter.

ADAPTOR MODEL	DUCT TYPE	EXISTING CURB DIMENSIONS	HEIGHT
80-290-29122PV	NON-CONCENTRIC	77.0 x 42.5	12"

FOR LIST PRICES: FORM# MARCH 15, 2011 FORM# 290-29122P

ProVent
3847 Wabash Drive, Mira Loma, California 91752 Phone (951) 685-1101 Fax (951) 681-6150

Curb-maker drawing (UNVERIFIED) · page 1 · https://www.proventusa.com/-/media/provent/catalog/pdf/york-curb-adapters/curb/p

TOP VIEW · LOOKING DOWN ON THE CURB · TO SCALE

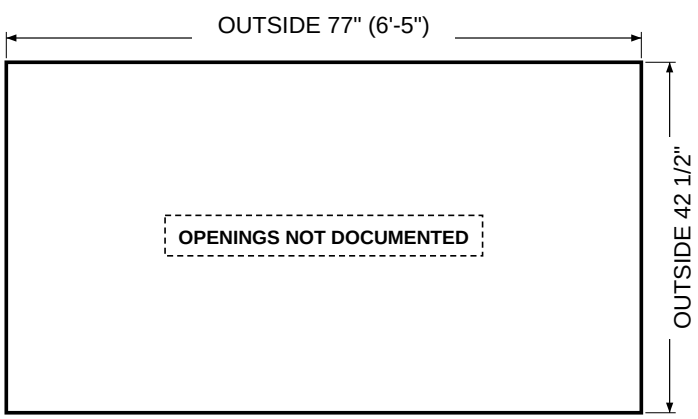

Rail width not documented, so the inside line is not drawn.
Measure here: OUTSIDE of the curb rail with a tape; unit end not documented.

Rheem/Ruud — **UNVERIFIED**
Part # (factory curb part unknown)
OUTSIDE 77 × 42 1/2" · Height 12 in · Tons 7-7.5 T · legacy

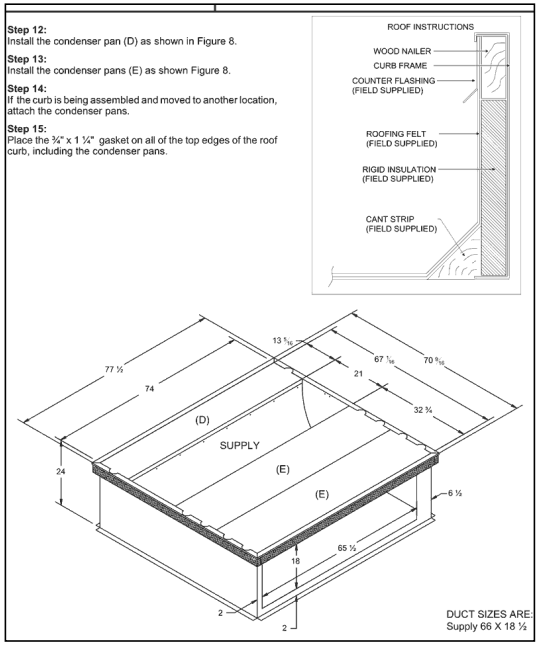

Step 12:
Install the condenser pan (D) as shown in Figure 8.

Step 13:
Install the condenser pans (E) as shown Figure 8.

Step 14:
If the curb is being assembled and moved to another location, attach the condenser pans.

Step 15:
Place the ¾" x 1 ¼" gasket on all of the top edges of the roof curb, including the condenser pans.

Manufacturer drawing · page 4 · https://literature.nordyne.com/pdf/770b.pdf?docuid=472AEF1A-379C-453B-BC74-B0C3586F4ED4&brandke

TOP VIEW · LOOKING DOWN ON THE CURB · TO SCALE

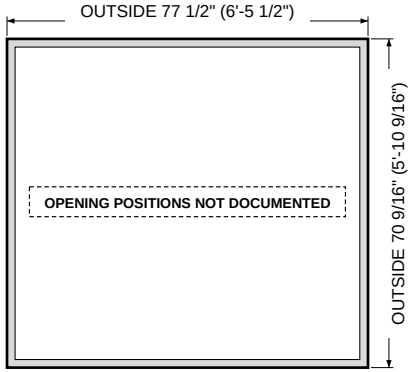

Grey band = curb rail, 1 3/4" wide. Inner line = INSIDE of rail: 74 × 67 1/16" (outside minus 2 × rail, calculated).
Supply opening 65 1/2 × 18": size documented, position not documented (not drawn).
Measure here: OUTSIDE of the curb rail with a tape; unit end not documented.

Nordyne — **VERIFIED**
Part # 555631 (horizontal) / 555632 (horizontal w/ duct)
OUTSIDE 77 1/2 × 70 9/16" · Height 24 (per drawing) in · 12.5-15 T · legacy
Ref: supply is a SIDE (horizontal) opening in one 77-1/2 long side: 65.5 wide x 18 tall, 2 in above curb bottom, 2 in from corner; no top openings; top chain across width 13-5/16 pan / 21 supply section / 32-3/4 pans; rail 1.75 derived (77.5-74)/2

SOURCE EXCERPT (left: the cited page of the manufacturer or curb-maker document) beside our TOP VIEW drawing (right, to scale, looking down).
Openings are drawn only where their offsets are documented; offsets run from the OUTSIDE left end and OUTSIDE bottom side. Curb-maker sources are UNVERIFIED.

Notes: 1. Adapters are welded, insulated, and totally sealed.
2. Adapters have duct transitions for ducted systems (not concentric).
3. Submittal drawings are available.
4. "New" adapters are not designed but are available. Part numbers will be as they are developed.
5. Consult RSI for concentric duct applications.
6. Field information may be required before production of adapters.
7. Units with different color text have multiple size curbs. Verify correct curb.

Bryant, Day and Night, and Payne

Unit Model No.	Curb L	Curb W	Curb Model	Notes	Footprint Code
542D 018-036	56.75	39.50	304851-301	Bottom discharge curb.	SRSE
542D 042-060	68.75	44.50	304851-302	Bottom discharge curb.	SRSE
542E 024-036	58.00	43.00	72-24-01	Stiles Corp. made curb.	SRSE
542E 042-060	64.00	51.25	72-24-02	Stiles Corp. made curb.	SRSE
542E 042-060	68.75	44.50	304851-302	Bottom discharge curb.	SRSE
542E 090-120	77.75	74.50	308450-201	Bottom discharge curb.	PRLM
548C 090-150	81.75	53.50	389028-203	Bottom discharge curb.	SRSE
558B 036-072	70.88	46.56	314213-201	Bottom discharge curb.	SRSE
558B 090-120	81.75	59.38	389004-201	Bottom discharge curb.	SRSE
558B 240	146.31	84.00	311785-201	Bottom discharge curb.	RSLM
558B 300-324	156.56	84.00	311785-202	Bottom discharge curb.	RSLM
558C-D 036-072	70.88	40.69	389028-201	Bottom discharge curb.	SRSE
559B 024-060	58.50	38.50		Bottom discharge curb.	SRSE
559C 048-060	81.13	45.56	70849D01	Bottom discharge curb.	SRSE
559C 090-150	84.44	60.63	70849DA2	Bottom discharge curb.	PRLM
559C 180	102.38	69.63	70849DA3	Bottom discharge curb.	PRLM
559C 240	150.00	69.38	70849D04	Bottom discharge curb.	VLRL
559C 300-360	164.75	69.38	70849D05	Bottom discharge curb.	VLRL
559D 018-036	56.75	39.50	304851-301	Bottom discharge curb.	SRSE
559D 042-060	68.75	44.50	304851-302	Bottom discharge curb.	SRSE
559D 090	64.69	60.75	307175-103	Bottom discharge curb.	SRSE
559D 090	64.69	60.75	307175-105	Bottom discharge curb.	SRSE
559D 120-180	77.75	74.50	308450-201	Bottom discharge curb.	PRLM
559E 024-036	58.00	43.00	72-24-01	Stiles Corp. made curb.	SRSE
559E 042-060	64.00	51.25	72-24-02	Stiles Corp. made curb.	SRSE
559E 048-060	68.75	44.50		Bottom discharge curb.	SRSE
559E 090	64.69	60.75	307175-103	Bottom discharge curb.	SRSE
559E 090	64.69	60.75	307175-105	Bottom discharge curb.	SRSE

SRSE RSLM PRLM VLRL

Curb-maker drawing (UNVERIFIED) · page 1 · https://www.ruskinrooftopsystems.com/Portals/5/bdp_web_adapters.pdf

TOP VIEW · LOOKING DOWN ON THE CURB · TO SCALE

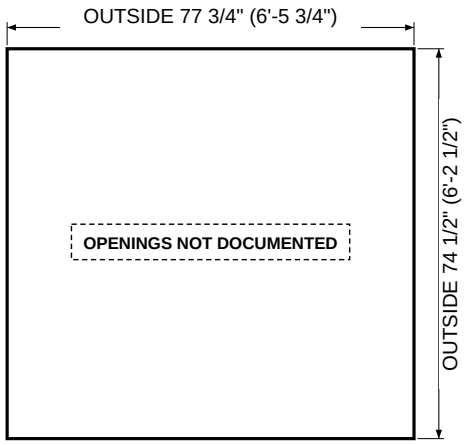

Rail width not documented, so the inside line is not drawn.
Measure here: OUTSIDE of the curb rail with a tape; unit end not documented.

Carrier/Bryant/ICP — **UNVERIFIED**
Part # 308450-201
OUTSIDE 77 3/4 × 74 1/2" · Tons 10-15 T · legacy

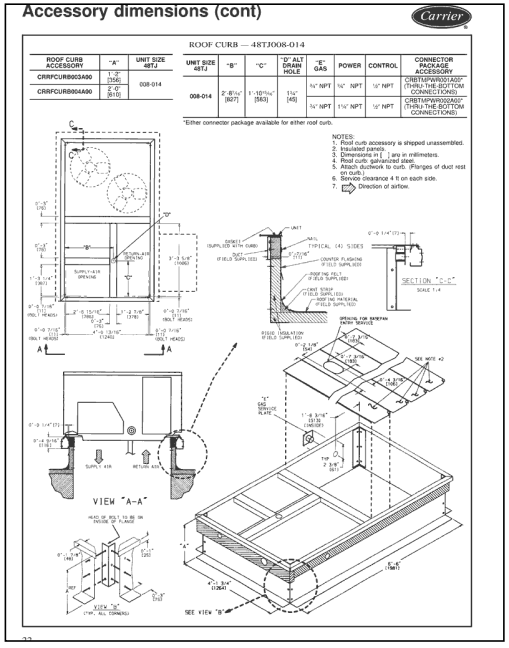

Manufacturer drawing · page 22 · https://wizard.youngsupply.com/files/5-9530.pdf

TOP VIEW · LOOKING DOWN ON THE CURB · TO SCALE

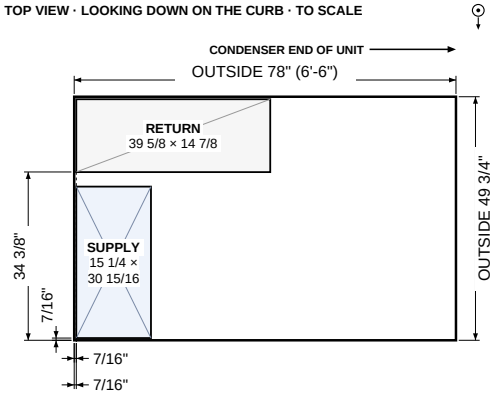

Rail width not documented, so the inside line is not drawn.
Offsets: from the OUTSIDE left end and the OUTSIDE bottom side of the curb to the opening's near edge. Openings are clear inside sizes.
Measure here: OUTSIDE of the curb rail with a tape.

Carrier/Bryant/ICP — **VERIFIED**
Part # CRRFCURB003A00 (14 in) / CRRFCURB004A00 (24 in)
OUTSIDE 78 × 49 3/4" · Height 14 / 24 in · Tons 7.5-12.5 T · legacy
Also OUTSIDE (2nd outline on drawing) 81 3/4 × 53 3/8"
Ref: x from the opening end (opposite condenser fans), y from the supply-side rail; 0.4375 = printed 7/16 bolt-head allowance; ret_y derived 0.4375+30.9375+3.0 (divider = 4'-0 13/16 - 2'-6 15/16 - 1'-2 7/8 = 3.0, closes); B/C/D in the table are drain-hole locations, not openings

SOURCE EXCERPT (left: the cited page of the manufacturer or curb-maker document) beside our TOP VIEW drawing (right, to scale, looking down).
Openings are drawn only where their offsets are documented; offsets run from the OUTSIDE left end and OUTSIDE bottom side. Curb-maker sources are UNVERIFIED.

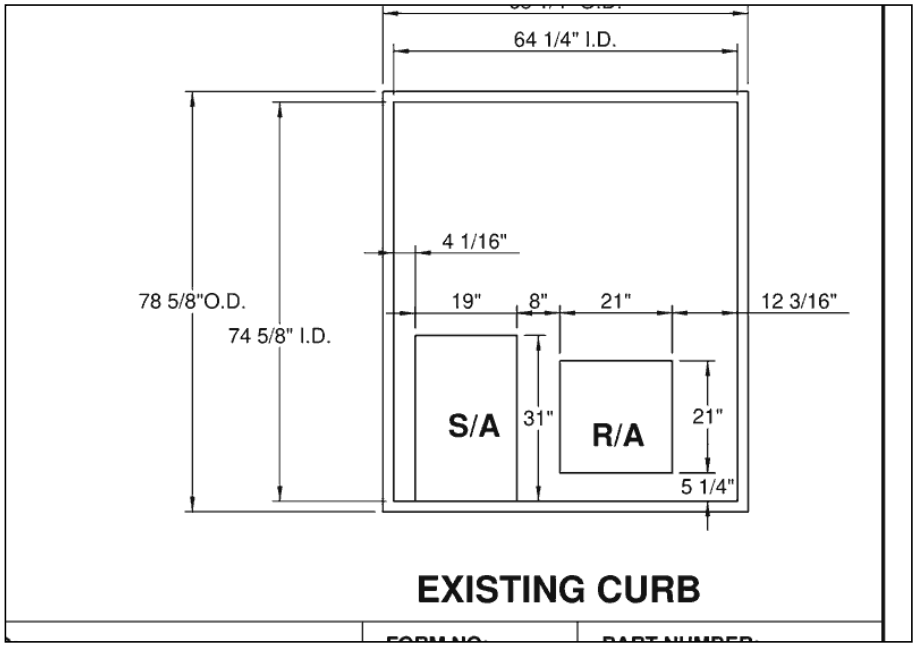

Curb-maker drawing (UNVERIFIED) · page 1 · https://www.proventusa.com/-/media/provent/catalog/pdf/york-curb-adapters/curb/sunline

TOP VIEW · LOOKING DOWN ON THE CURB · TO SCALE

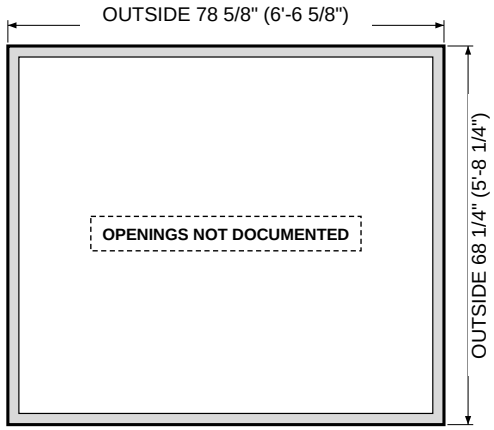

Grey band = curb rail, 2" wide. Inner line = INSIDE of rail: 74 5/8 × 64 1/4" (outside minus 2 × rail, calculated).
Measure here: OUTSIDE of the curb rail with a tape; unit end not documented.

Lennox — UNVERIFIED
Part # (factory curb part unknown)
OUTSIDE 78 5/8 × 68 1/4" · Tons 4-5 T · legacy

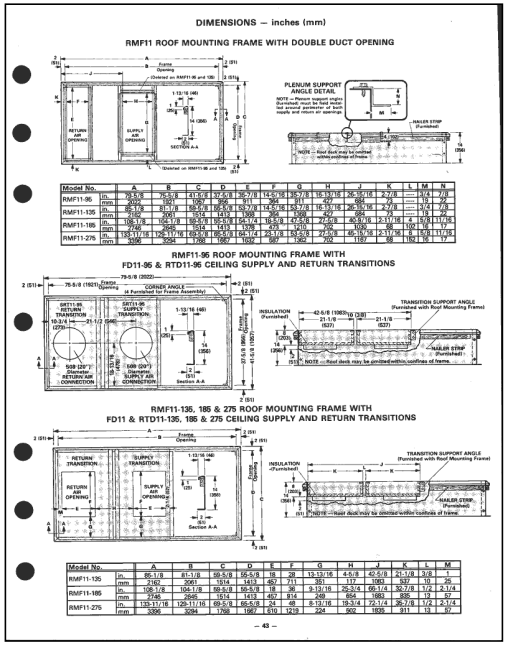
DIMENSIONS — inches (mm)

RMF11 ROOF MOUNTING FRAME WITH DOUBLE DUCT OPENING

Model No.		A	B	C	D	E	F	G	H	J	K	L	M	N
RMF11-95	in.	79-5/8	75-5/8	41-5/8	37-5/8	35-7/8	14-5/16	35-7/8	16-13/16	26-15/16	2-7/8		3/4	7/8
	mm	2023	1921	1057	956	911	364	911	427	684	73		19	22
RMF11-135	in.	107-5/8	103-5/8	55-5/8	51-5/8	49-7/8	14-5/16	49-7/8	16-13/16	26-15/16	2-7/8		3/4	7/8
	mm	2735	2634	1413	1308	1267	364	1267	427	684	73		19	22
RMF11-185	in.	155-7/8	151-7/8	79-5/8	75-5/8	73-7/8	14-5/16	73-7/8	16-13/16	26-15/16	2-7/8	4	5/8	11/16
	mm	3962	3861	2024	1921	1877	364	1877	427	684	73	100	16	17
RMF11-275	in.	155-7/8	151-7/8	79-5/8	75-5/8	73-7/8	14-5/16	73-7/8	16-13/16	26-15/16	2-7/8	4	5/8	11/16
	mm	3962	3861	2024	1921	1877	364	1877	427	684	73	100	16	17

RMF11-95 ROOF MOUNTING FRAME WITH FD11-95 & RTD11-95 CEILING SUPPLY AND RETURN TRANSITIONS

RMF11-135, 185 & 275 ROOF MOUNTING FRAME WITH FD11 & RTD11-135, 185 & 275 CEILING SUPPLY AND RETURN TRANSITIONS

Model No.		A	B	C	D	E	F	G	H	J	K	L	M
RMF11-135	in.	85-1/8	81-1/8	55-5/8	55-5/8	18	28	13-13/16	4-5/8	42-5/8	21-1/8	3/8	1
	mm	2162	2061	1514	1413	457	711	351	117	1083	537	10	25
RMF11-185	in.	108-1/8	104-1/8	69-5/8	69-5/8	18	36	8-13/16	25-3/4	66-1/4	32-7/8	1/2	2-1/4
	mm	2746	2645	1514	1413	457	914	246	654	1683	835	13	57
RMF11-275	in.	133-17/16	129-11/16	69-5/8	69-5/8	24	48	8-13/16	19-3/4	72-1/4	36-7/8	1/2	2-1/4
	mm	3396	3294	1768	1967	610	1219	224	502	1835	911	13	57

– 43 –

Manufacturer drawing · page 13 · https://tech.lennoxintl.com/C03e7o14l/VIu12Ch2uV/ehb_can_cha11_953_1353_1853_2753_8310.pdf

TOP VIEW · LOOKING DOWN ON THE CURB · TO SCALE

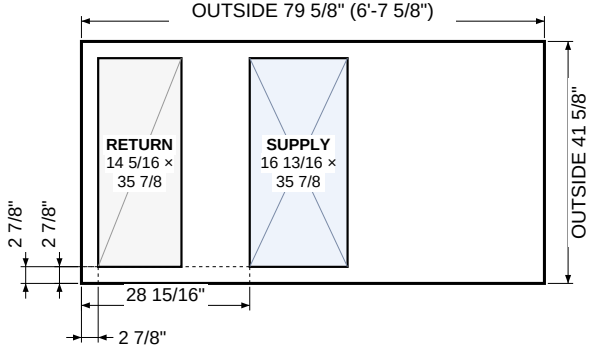

Rail width not documented, so the inside line is not drawn.
Offsets: from the OUTSIDE left end and the OUTSIDE bottom side of the curb to the opening's near edge. Openings are clear inside sizes.
Measure here: OUTSIDE of the curb rail with a tape; unit end not documented.

Lennox — VERIFIED
Part # RMF11-95 roof mounting frame (double duct opening)
OUTSIDE 79 5/8 × 41 5/8" · Tons 7.5 T · legacy
Ref: outside LEFT end (A dimension, length) and BOTTOM side (C dimension, width) as drawn; supply x = J (from inside frame edge) + 2 in. frame leg; K measured from outside edge

SOURCE EXCERPT (left: the cited page of the manufacturer or curb-maker document) beside our TOP VIEW drawing (right, to scale, looking down).
Openings are drawn only where their offsets are documented; offsets run from the OUTSIDE left end and OUTSIDE bottom side. Curb-maker sources are UNVERIFIED.

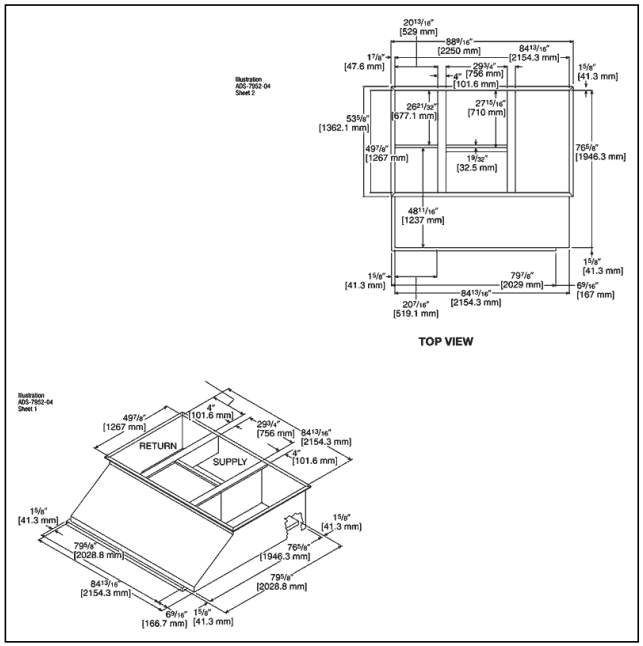

Manufacturer drawing · page 44 · https://resource.gemaire.com/is/content/Watscocom/Gemaire/rheem_rkkl-b090dl15e_article_13745:

TOP VIEW · LOOKING DOWN ON THE CURB · TO SCALE

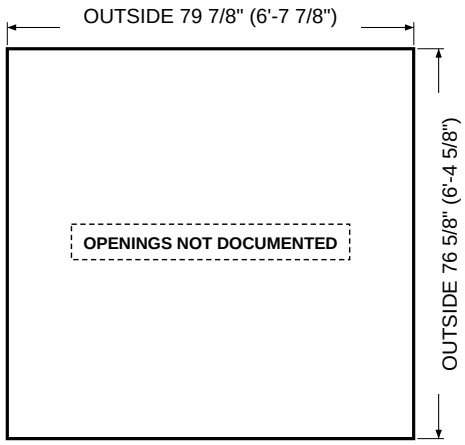

Rail width not documented, so the inside line is not drawn.
Measure here: OUTSIDE of the curb rail with a tape; unit end not documented.

Rheem/Ruud — UNVERIFIED
Part # RXPK-C12
OUTSIDE 79 7/8 × 76 5/8" · legacy

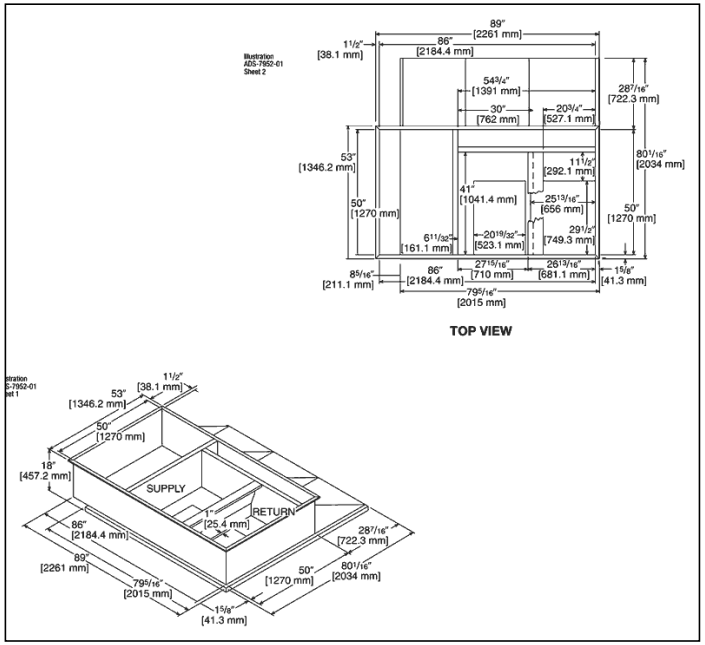

Manufacturer drawing · page 42 · https://resource.gemaire.com/is/content/Watscocom/Gemaire/rheem_rkkl-b090dl15e_article_13745:

TOP VIEW · LOOKING DOWN ON THE CURB · TO SCALE

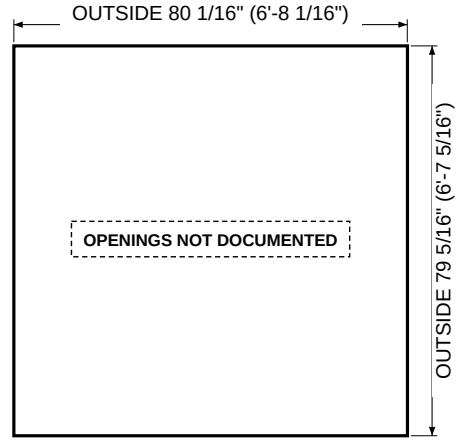

Rail width not documented, so the inside line is not drawn.
Measure here: OUTSIDE of the curb rail with a tape; unit end not documented.

Rheem/Ruud — UNVERIFIED
Part # RXRK-E54
OUTSIDE 80 1/16 × 79 5/16" · legacy

SOURCE EXCERPT (left: the cited page of the manufacturer or curb-maker document) beside our TOP VIEW drawing (right, to scale, looking down).
Openings are drawn only where their offsets are documented; offsets run from the OUTSIDE left end and OUTSIDE bottom side. Curb-maker sources are UNVERIFIED.

Notes: 1. Adapters are welded, insulated, and totally sealed.
2. Adapters have duct transitions for ducted systems (not concentric).
3. Submittal drawings are available.
4. "New" adapters are not designed but are available. Part numbers will be as they are developed.
5. Consult RSI for concentric duct applications.
6. Field information may be required before production of adapters.
7. Units with different color text have multiple size curbs. Verify correct curb.

Bryant, Day and Night, and Payne

Unit Model No.	Curb L x W		Curb Model	Notes	Footprint Code
579C 048-060	81.13	45.56	70849D01	Bottom discharge curb.	RSLR
579C 090-150	84.44	60.63	70849DA2	Bottom discharge curb.	PRLM
579C 180	102.38	69.63	70849DA3	Bottom discharge curb.	PRLM
579C 240	150.00	69.38	70849D04	Bottom discharge curb.	VLRL
579C 300-360	164.75	69.38	70849D05	Bottom discharge curb.	VLRL
579D 036-060	69.13	36.50	309427-101	Bottom discharge curb.	SERL
579D 090	80.56	60.75	307175-102	Bottom discharge curb.	SERL
579D 120-180	77.75	74.50	308450-201	Bottom discharge curb.	PRLM
579E 240-300	77.75	70.56	50PQ900221	Bottom discharge curb.	PRLM
579E-G048125-060	70.50	62.50	304851-304	Bottom discharge curb.	SRSE
580B 036-072	70.88	46.56	314213-201	Bottom discharge curb.	SRSE
580B 090-120	81.75	59.38	389004-201	Bottom discharge curb.	SRSE
580C-D 036-072	70.88	40.69	389028-201	Bottom discharge curb.	SRSE
585A 018-024	54.50	43.75	301585-301	Bottom discharge curb.	SRSE
585A 024-036	64.50	43.75	301585-302	Bottom discharge curb.	SRSE
585A 048-060	70.50	57.75	301585-303	Bottom discharge curb.	SRSE
585A 048-060	70.50	66.00	301585-304	Bottom discharge curb.	SRSE
585C 018050-036075	64.00	51.25	72-24-02	Stiles Corp. made curb.	SRSE
585C 036125-060150	77.00	51.25	72-24-03	Stiles Corp. made curb.	SRSE
585C 090	90.00	55.00	DPPC-008DG	Stiles Corp. made curb.	RDSL
585C 090-150	81.75	53.50	389028-203	Bottom discharge curb.	SRSE
585E 090	80.56	60.75	307175-102	Bottom discharge curb.	SERL
585E-G 018-036075	59.50	50.50	304851-303	Bottom discharge curb.	SRSE
585E-G048125-060	70.50	62.50	304851-304	Bottom discharge curb.	SRSE

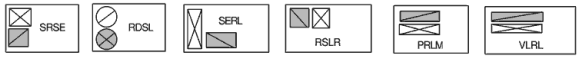

Curb-maker drawing (UNVERIFIED) · page 2 · https://www.ruskinrooftopsystems.com/Portals/5/bdp_web_adapters.pdf

TOP VIEW · LOOKING DOWN ON THE CURB · TO SCALE

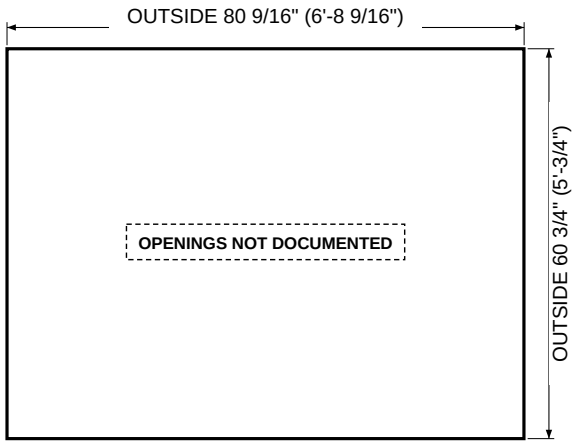

Rail width not documented, so the inside line is not drawn.
Measure here: OUTSIDE of the curb rail with a tape; unit end not documented.

Carrier/Bryant/ICP — UNVERIFIED
Part # 307175-102
OUTSIDE 80 9/16 × 60 3/4" · Tons 7.5 T · legacy

ROOF CURB
MODEL: 1RC0470 & 1RC0471
FOR UNITS: ZH/ZJ/ZR037 thru 150, ZF078 thru 150, XP078 thru 150

YORK Heating and Air Conditioning

JOB NAME: LOCATION:
PURCHASER: ORDER NO:
ENGINEER:
SUBMITTED TO: FOR: REF: APPROVAL: CONSTRUCTION:
SUBMITTED BY: DATE:
UNIT DESIGNATION: SCHEDULE NO. MODEL NO.

* Supply and Return Air (including duct support rails) as shown, are typical for bottom duct applications.
For location of horizontal duct applications (on back of unit), refer to Unit Dimension details.

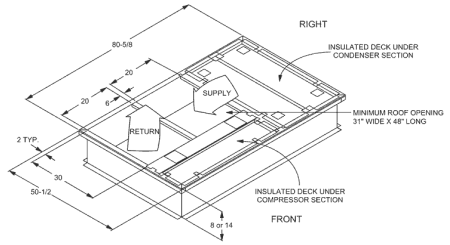

ROOF CURB MODEL NUMBER
8" - 1RC0470
14" - 1RC0471

NOTE:
1. Roof curb is built to NRCA standards.
2. 8" Roof curb is constructed of 18 gauge G90 steel, 14" Roof curb is constructed of 16 gauge G90 steel.
3. Unit duct supports are provided.
4. Full perimeter 4" wood nailer.
5. Curbs are shipped unassembled.
6. Corner hinge pins are used for assembly.

Subject to change without notice. Printed in U.S.A.
Copyright © 2011 by Johnson Controls, Inc. All rights reserved.
685094-YSD-B-0211
Supersedes: 036-22930-001-A-0904
Johnson Controls Unitary Products

Manufacturer drawing · page 1 · https://www.upgnet.com/dsmarketingprod/gatekeeper/Documents/Archive_CDs/York_2014/PDF_FILES/685(

TOP VIEW · LOOKING DOWN ON THE CURB · TO SCALE

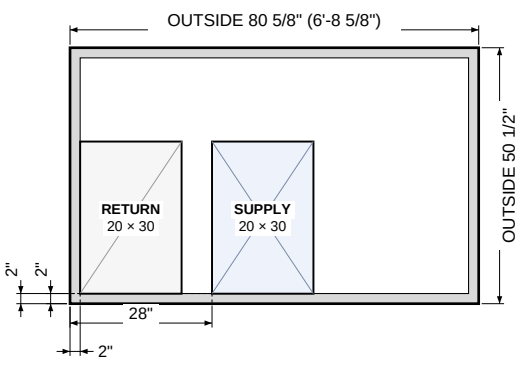

Grey band = curb rail, 2" wide. Inner line = INSIDE of rail: 76 5/8 × 46 1/2" (outside minus 2 × rail, calculated).
Offsets: from the OUTSIDE left end and the OUTSIDE bottom side of the curb to the opening's near edge. Openings are clear inside sizes.
Measure here: OUTSIDE of the curb rail with a tape; unit end not documented.

York/JCI — VERIFIED
Part # 1RC0470 (8 in) / 1RC0471 (14 in)
OUTSIDE 80 5/8 × 50 1/2" · Height 8 / 14 in · Tons 3-12.5 (6.5-12.5 on older Predator) · legacy
Ref: x from the LEFT (return) outside end, y from the BACK outside side; derived: 2 rail + 20 return + 6 divider = 28; 30 measured from the inside of the back rail. Dims include duct support rails per sheet note.

SOURCE EXCERPT (left: the cited page of the manufacturer or curb-maker document) beside our TOP VIEW drawing (right, to scale, looking down).
Openings are drawn only where their offsets are documented; offsets run from the OUTSIDE left end and OUTSIDE bottom side. Curb-maker sources are UNVERIFIED.

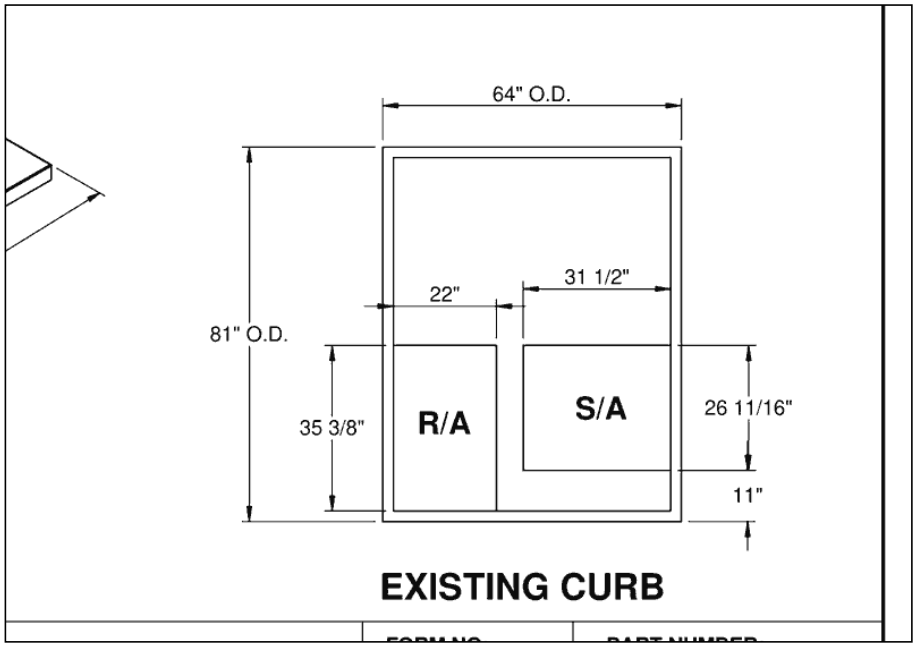

Curb-maker drawing (UNVERIFIED) · page 1 · https://www.proventusa.com/-/media/provent/catalog/pdf/york-curb-adapters/curb/preda

TOP VIEW · LOOKING DOWN ON THE CURB · TO SCALE

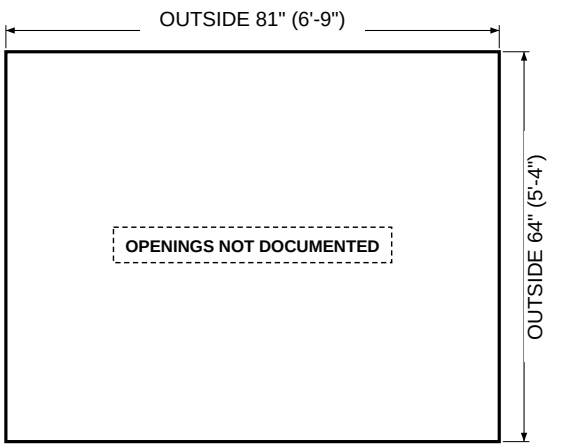

Rail width not documented, so the inside line is not drawn.
Measure here: OUTSIDE of the curb rail with a tape; unit end not documented.

Trane/American Standard — UNVERIFIED
Part # (factory curb part unknown)
OUTSIDE 81 × 64" · Tons 7.5-10 T · legacy

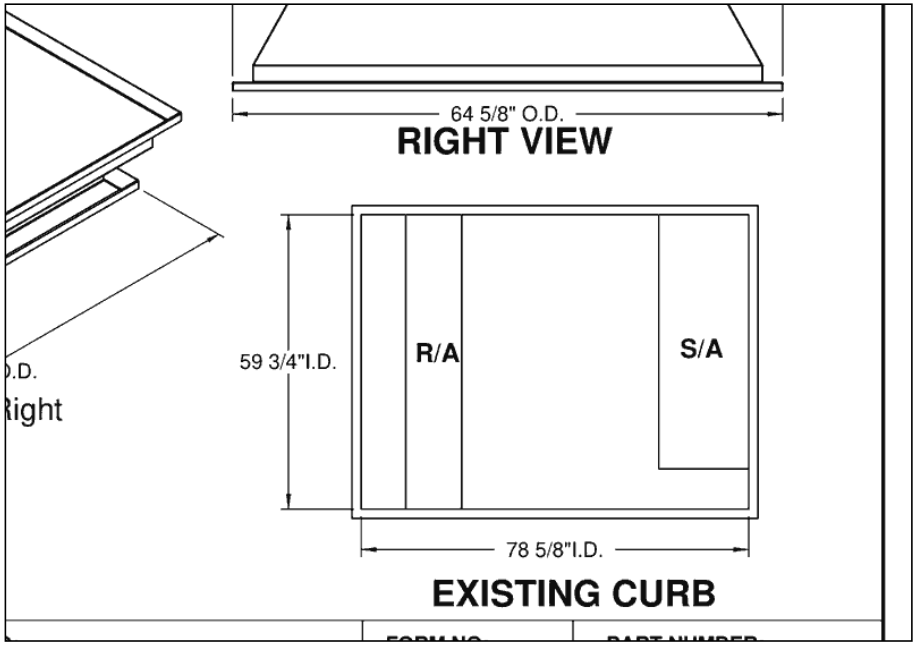

Curb-maker drawing (UNVERIFIED) · page 1 · https://www.proventusa.com/-/media/provent/catalog/pdf/york-curb-adapters/curb/predator

TOP VIEW · LOOKING DOWN ON THE CURB · TO SCALE

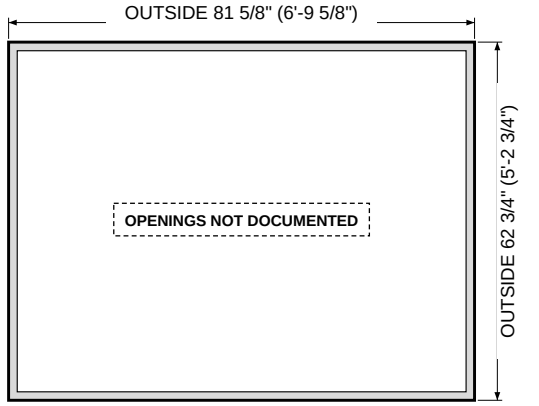

Grey band = curb rail, 1 1/2" wide. Inner line = INSIDE of rail: 78 5/8 × 59 3/4" (outside minus 2 × rail, calculated).
Measure here: OUTSIDE of the curb rail with a tape; unit end not documented.

Trane/American Standard — CALCULATED
Part # (factory curb part unknown)
OUTSIDE 81 5/8 × 62 3/4" · Tons 12.5 T · legacy
Ref: calc: printed existing-curb INSIDE 78.625 x 59.75 + 2 x 1-1/2 rail (rail as printed on ProVent TRN16)

SOURCE EXCERPT (left: the cited page of the manufacturer or curb-maker document) beside our TOP VIEW drawing (right, to scale, looking down).
Openings are drawn only where their offsets are documented; offsets run from the OUTSIDE left end and OUTSIDE bottom side. Curb-maker sources are UNVERIFIED.

Notes: 1. Adapters are welded, insulated, and totally sealed.
2. Adapters have duct transitions for ducted systems (not concentric).
3. Submittal drawings are available.
4. "New" adapters are not designed but are available. Part numbers will be as they are developed.
5. Consult RSI for concentric duct applications.
6. Field information may be required before production of adapters.
7. Units with different color text have multiple size curbs. Verify correct curb.

Bryant, Day and Night, and Payne					
Unit Model No.	Curb L x W		Curb Model	Notes	Footprint Code
542D 018-036	56.75	39.50	304851-301	Bottom discharge curb.	SRSE
542D 042-060	68.75	44.50	304851-302	Bottom discharge curb.	SRSE
542E 024-036	58.00	43.00	72-24-01	Stiles Corp. made curb.	SRSE
542E 042-060	64.00	51.25	72-24-02	Stiles Corp. made curb.	SRSE
542E 042-060	68.75	44.50	304851-302	Bottom discharge curb.	SRSE
542E 090-120	77.75	74.50	308450-201	Bottom discharge curb.	PRLM
548C 090-150	81.75	53.50	389028-203	Bottom discharge curb.	SRSE
558B 036-072	70.88	46.56	314213-201	Bottom discharge curb.	SRSE
558B 090-120	81.75	59.38	389004-201	Bottom discharge curb.	SRSE
558B 240	146.31	84.00	311785-201	Bottom discharge curb.	RSLM
558B 300-324	156.56	84.00	311785-202	Bottom discharge curb.	RSLM
558C-D 036-072	70.88	40.69	389028-201	Bottom discharge curb.	SRSE
559B 024-060	58.50	38.50		Bottom discharge curb.	SRSE
559C 048-060	81.13	45.56	70849D01	Bottom discharge curb.	SRSE
559C 090-150	84.44	60.63	70849DA2	Bottom discharge curb.	PRLM
559C 180	102.38	69.63	70849DA3	Bottom discharge curb.	PRLM
559C 240	150.00	69.38	70849D04	Bottom discharge curb.	VLRL
559C 300-360	164.75	69.38	70849D05	Bottom discharge curb.	VLRL
559D 018-036	56.75	39.50	304851-301	Bottom discharge curb.	SRSE
559D 042-060	68.75	44.50	304851-302	Bottom discharge curb.	SRSE
559D 090	64.69	60.75	307175-103	Bottom discharge curb.	SRSE
559D 090	64.69	60.75	307175-105	Bottom discharge curb.	SRSE
559D 120-180	77.75	74.50	308450-201	Bottom discharge curb.	PRLM
559E 024-036	58.00	43.00	72-24-01	Stiles Corp. made curb.	SRSE
559E 042-060	64.00	51.25	72-24-02	Stiles Corp. made curb.	SRSE
559E 048-060	68.75	44.50		Bottom discharge curb.	SRSE
559E 090	64.69	60.75	307175-103	Bottom discharge curb.	SRSE
559E 090	64.69	60.75	307175-105	Bottom discharge curb.	SRSE

SRSE RSLM PRLM VLRL

Curb-maker drawing (UNVERIFIED) · page 1 · https://www.ruskinrooftopsystems.com/Portals/5/bdp_web_adapters.pdf

TOP VIEW · LOOKING DOWN ON THE CURB · TO SCALE

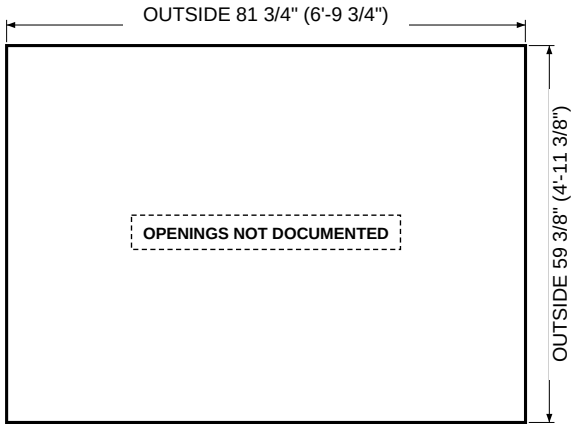

Rail width not documented, so the inside line is not drawn.
Measure here: OUTSIDE of the curb rail with a tape; unit end not documented.

Carrier/Bryant/ICP — UNVERIFIED
Part # 389004-201
OUTSIDE 81 3/4 × 59 3/8" · Height 14 / 24 in · Tons 7.5-10 T · legacy

CURB ADAPTOR FOR YORK INTERNATIONAL
OLD UNIT: SPCB C12
NEW UNIT: DM/DF/DH 078-150 / DJ/DR 090-150
BP 078-150

Notes:
1. Fully welded G90 galvanized construction.
2. Fully insulated.
3. Gaskets shipped with adaptor.
4. Separate supply and return ducts only. (No concentrics - Consult factory.)
5. Adaptor matches existing duct.
6. Existing curb O.D. Is 1 inch less than bottom skirt of adapter.

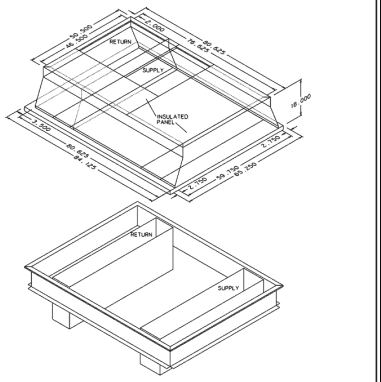

RRS ADAPTOR MODEL	DUCT TYPE	EXISTING CURB DIMENSIONS	HEIGHT
80-290-29103PV	NON-CONCENTRIC	83.00 x 64.50	18"

FOR LIST PRICES: FORM# SEPTEMBER 29, 2010 FORM# 8029103P

ProVent
3847 Wabash Drive, Mira Loma, California 91752 Phone (951) 685-1101 Fax (951) 681-6150

Curb-maker drawing (UNVERIFIED) · page 1 · https://www.proventusa.com/-/media/provent/catalog/pdf/york-curb-adapters/curb/preda

TOP VIEW · LOOKING DOWN ON THE CURB · TO SCALE

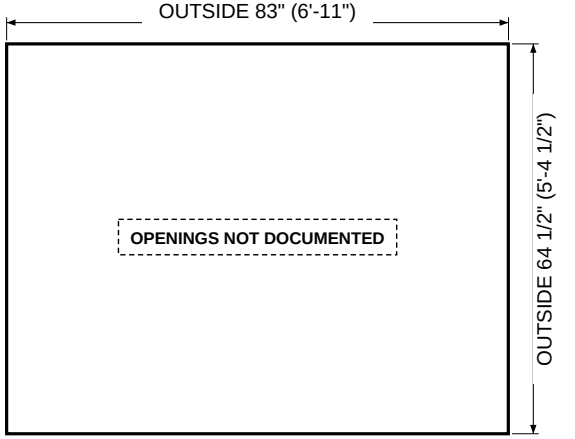

Rail width not documented, so the inside line is not drawn.
Measure here: OUTSIDE of the curb rail with a tape; unit end not documented.

Trane/American Standard — UNVERIFIED
Part # (factory curb part unknown)
OUTSIDE 83 × 64 1/2" · Tons 12.5 T · legacy

SOURCE EXCERPT (left: the cited page of the manufacturer or curb-maker document) beside our TOP VIEW drawing (right, to scale, looking down).
Openings are drawn only where their offsets are documented; offsets run from the OUTSIDE left end and OUTSIDE bottom side. Curb-maker sources are UNVERIFIED.

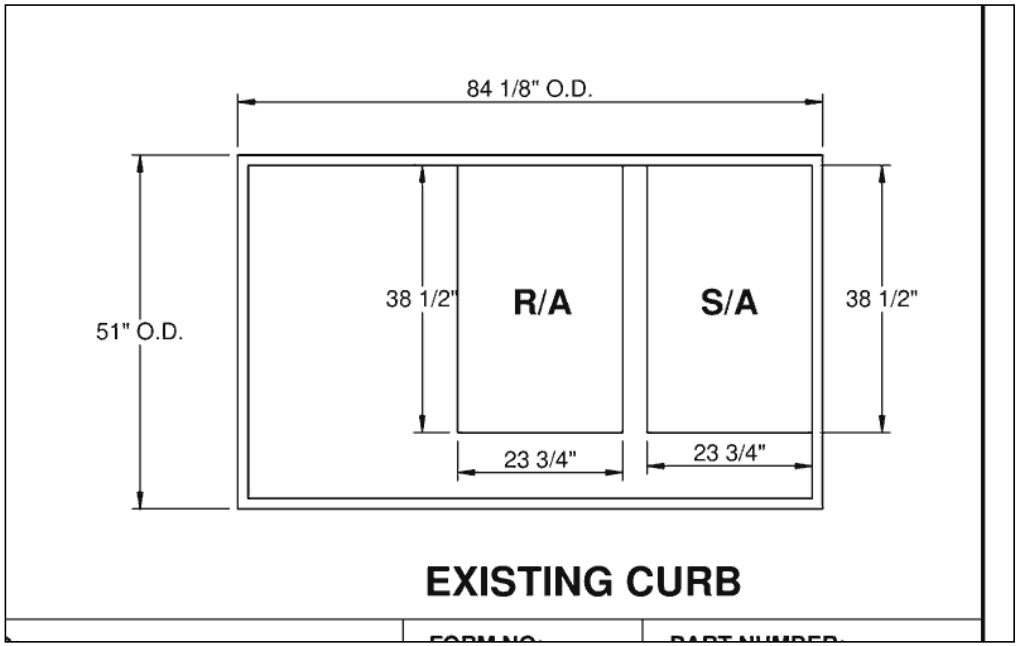

Curb-maker drawing (UNVERIFIED) · page 1 · https://www.proventusa.com/-/media/provent/catalog/pdf/york-curb-adapters/curb/pr

TOP VIEW · LOOKING DOWN ON THE CURB · TO SCALE

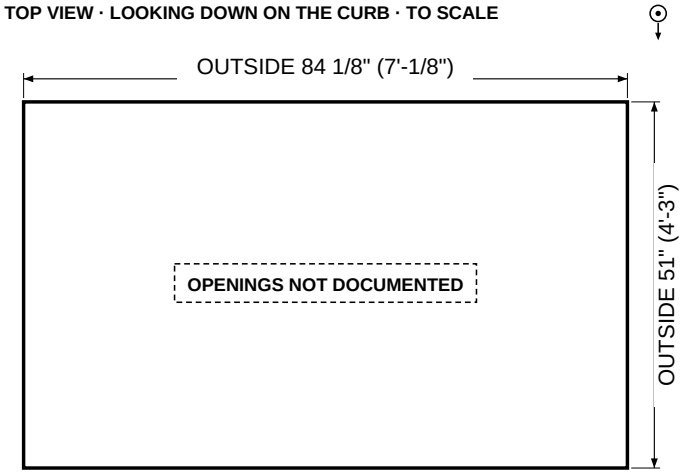

Rail width not documented, so the inside line is not drawn.
Measure here: OUTSIDE of the curb rail with a tape; unit end not documented.

Carrier/Bryant/ICP — UNVERIFIED
Part # (factory curb part unknown)
OUTSIDE 84 1/8 × 51" · Height 14 in · Tons 7.5-10 T · legacy

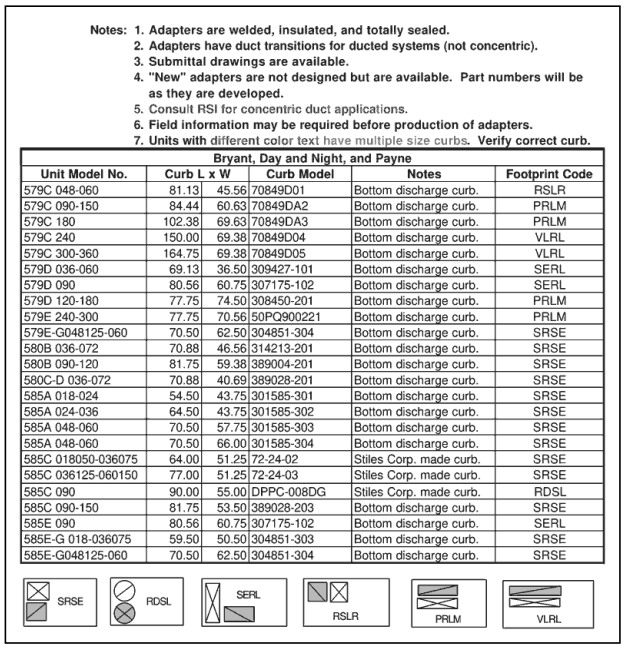

Notes:
1. **Adapters are welded, insulated, and totally sealed.**
2. **Adapters have duct transitions for ducted systems (not concentric).**
3. **Submittal drawings are available.**
4. **"New" adapters are not designed but are available. Part numbers will be as they are developed.**
5. **Consult RSI for concentric duct applications.**
6. **Field information may be required before production of adapters.**
7. **Units with different color text have multiple size curbs. Verify correct curb.**

Bryant, Day and Night, and Payne

Unit Model No.	Curb L	x W	Curb Model	Notes	Footprint Code
579C 048-060	81.13	45.56	70849D01	Bottom discharge curb.	RSLR
579C 090-150	84.44	60.63	70849DA2	Bottom discharge curb.	PRLM
579C 180	102.38	69.63	70849DA3	Bottom discharge curb.	PRLM
579C 240	150.00	69.38	70849D04	Bottom discharge curb.	VLRL
579C 300-360	164.75	69.38	70849D05	Bottom discharge curb.	VLRL
579D 036-060	69.13	36.50	309427-101	Bottom discharge curb.	SERL
579D 090	80.56	60.75	307175-102	Bottom discharge curb.	SERL
579D 120-180	77.75	74.50	308450-201	Bottom discharge curb.	PRLM
579E 240-300	77.75	70.56	50PQ900221	Bottom discharge curb.	PRLM
579E-G048125-060	70.50	62.50	304851-304	Bottom discharge curb.	SRSE
580B 036-072	70.88	46.56	314213-201	Bottom discharge curb.	SRSE
580B 090-120	81.75	59.38	389004-201	Bottom discharge curb.	SRSE
580C-D 036-072	70.88	40.69	389028-201	Bottom discharge curb.	SRSE
585A 018-024	54.50	43.75	301585-301	Bottom discharge curb.	SRSE
585A 024-036	64.50	43.75	301585-302	Bottom discharge curb.	SRSE
585A 048-060	70.50	57.75	301585-303	Bottom discharge curb.	SRSE
585A 048-060	70.50	66.00	301585-304	Bottom discharge curb.	SRSE
585C 018050-036075	64.00	51.25	72-24-02	Stiles Corp. made curb.	SRSE
585C 036125-060150	77.00	51.25	72-24-03	Stiles Corp. made curb.	SRSE
585C 090	90.00	55.00	DPPC-008DG	Stiles Corp. made curb.	RDSL
585C 090-150	81.75	53.50	389028-203	Bottom discharge curb.	SRSE
585E 090	80.56	60.75	307175-102	Bottom discharge curb.	SERL
585E-G 018-036075	59.50	50.50	304851-303	Bottom discharge curb.	SRSE
585E-G048125-060	70.50	62.50	304851-304	Bottom discharge curb.	SRSE

Curb-maker drawing (UNVERIFIED) · page 2 · https://www.ruskinrooftopsystems.com/Portals/5/bdp_web_adapters.pdf

TOP VIEW · LOOKING DOWN ON THE CURB · TO SCALE

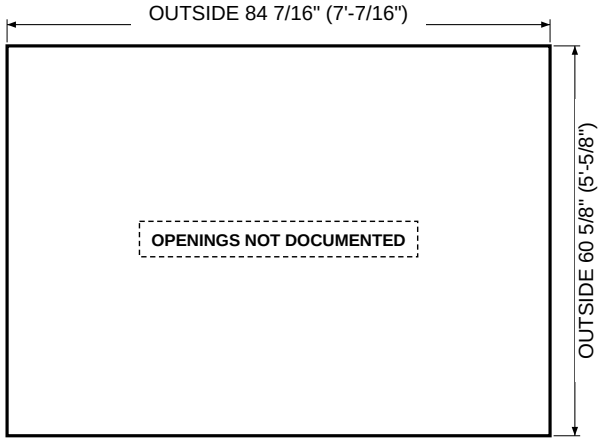

Rail width not documented, so the inside line is not drawn.
Measure here: OUTSIDE of the curb rail with a tape; unit end not documented.

Carrier/Bryant/ICP — UNVERIFIED
Part # 70849DA2
OUTSIDE 84 7/16 × 60 5/8" · Tons 7.5-12.5 T · legacy

SOURCE EXCERPT (left: the cited page of the manufacturer or curb-maker document) beside our TOP VIEW drawing (right, to scale, looking down).
Openings are drawn only where their offsets are documented; offsets run from the OUTSIDE left end and OUTSIDE bottom side. Curb-maker sources are UNVERIFIED.

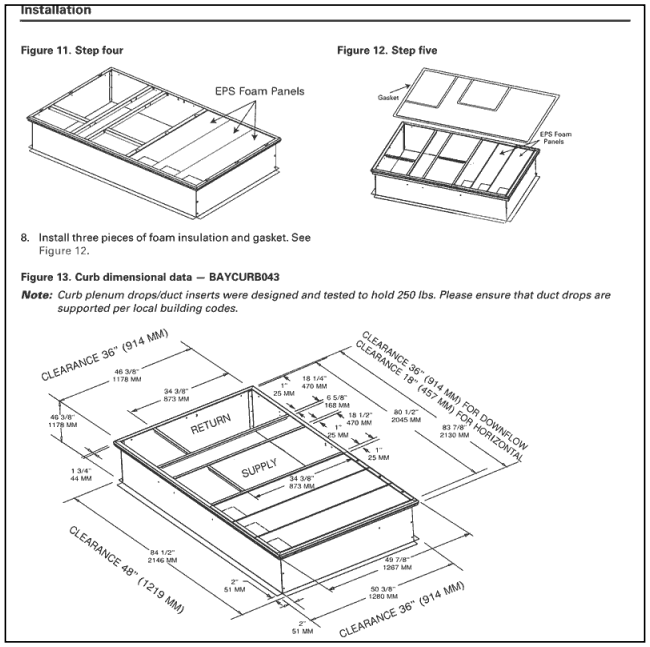

Installation

Figure 11. Step four

Figure 12. Step five

8. Install three pieces of foam insulation and gasket. See Figure 12.

Figure 13. Curb dimensional data — BAYCURB043

Note: *Curb plenum drops/duct inserts were designed and tested to hold 250 lbs. Please ensure that duct drops are supported per local building codes.*

Manufacturer drawing · page 10 · https://elibrary.tranetechnologies.com/public/trane-history/Literature/Installation/ACC-SVN43N-EN_042420

TOP VIEW · LOOKING DOWN ON THE CURB · TO SCALE

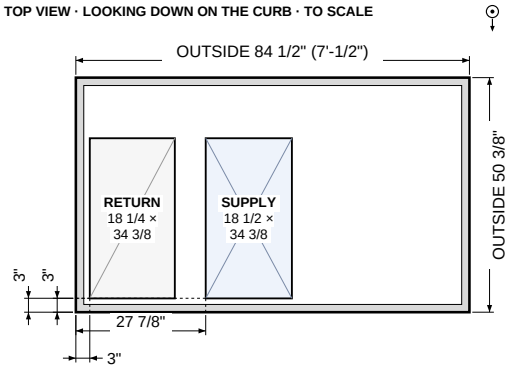

Grey band = curb rail, 1 11/16" wide. Inner line = INSIDE of rail: 81 1/8 × 47" (outside minus 2 × rail, calculated).
Offsets: from the OUTSIDE left end and the OUTSIDE bottom side of the curb to the opening's near edge. Openings are clear inside sizes.
Measure here: OUTSIDE of the curb rail with a tape; unit end not documented.

Trane/American Standard VERIFIED
Part # BAYCURB043A / BAYCURB043* (current equivalent FIACURB402*/802* for new Precedent B cabinet)
OUTSIDE 84 1/2 × 50 3/8" · Height 14 (FIACURB802*: 18) in · 6-10 T · legacy
Also OUTSIDE (2nd outline on drawing) 83 7/8 × 49 7/8"
Ref: offsets from BASE outline (84-1/2 x 50-3/8; inside faces 2.0 in): x from return end = 2.0 + 1 + 18-1/4 + 6-5/8 divider (derived); y = 2.0 + printed 1 in side offset, same side for both; rail_in = top rail (83-7/8-80-1/2)/2, derived

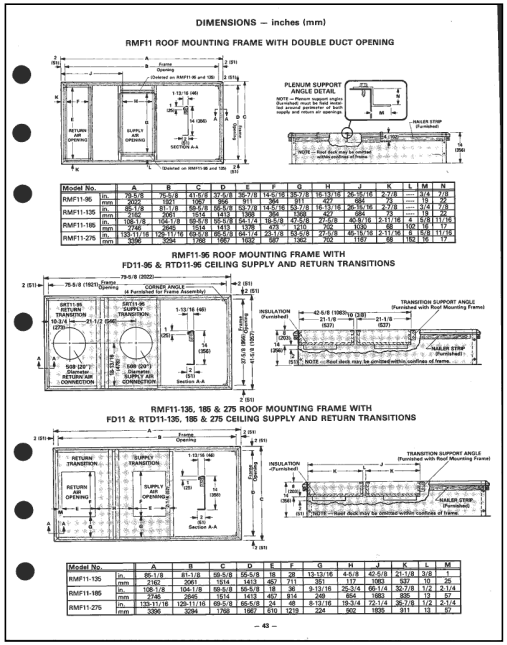

DIMENSIONS — inches (mm)

RMF11 ROOF MOUNTING FRAME WITH DOUBLE DUCT OPENING

Model No.		A	B	C	D	E	F	G	H	J	K	L	M	N
RMF11-95	in.	79-5/8	79-5/8	41-5/8	37-5/8	35-7/8	14-5/16	35-7/8	16-13/16	26-15/16	2-7/8	—	3/4	7/8
	mm	2019	2019	1057	956	911	364	911	427	684	73	—	19	22
RMF11-135	in.	95-1/8	81-1/8	55-5/8	53-5/8	51-7/8	14-5/16	51-7/8	16-13/16	26-15/16	2-7/8	—	3/4	7/8
	mm	2165	2061	1414	1362	1318	364	1318	427	684	73	—	19	22
RMF11-185	in.	108-1/8	104-1/8	69-5/8	67-5/8	65-7/8	16-5/8	47-5/8	27-5/8	40-9/16	2-11/16	4	5/8	11/16
	mm	2746	2645	1768	1718	1673	425	1210	702	1030	68	102	16	17
RMF11-275	in.	133-11/16	129-11/16	69-5/8	67-5/8	65-7/8	24-1/4	83-5/8	27-5/8	45-15/16	2-11/16	8	5/8	11/16
	mm	3396	3294	1768	1867	1832	597	1962	702	1167	68	192	16	17

RMF11-95 ROOF MOUNTING FRAME WITH FD11-95 & RTD11-95 CEILING SUPPLY AND RETURN TRANSITIONS

RMF11-135, 185 & 275 ROOF MOUNTING FRAME WITH FD11 & RTD11-135, 185 & 275 CEILING SUPPLY AND RETURN TRANSITIONS

Model No.		A	B	C	D	E	F	G	H	J	K	L	M
RMF11-135	in.	95-1/8	81-1/8	55-5/8	55-5/8	18	28	13-13/16	4-5/8	42-5/8	21-1/8	3/8	1
	mm	2162	2061	1414	1413	457	711	351	117	1083	537	10	25
RMF11-185	in.	108-1/8	104-1/8	69-5/8	69-5/8	18	36	8-13/16	25-3/4	66-1/4	30-7/8	1/2	2-1/4
	mm	2746	2645	1514	1413	457	914	248	654	1683	835	13	57
RMF11-275	in.	133-17/16	129-11/16	69-5/8	69-5/8	24	48	8-13/16	19-3/4	72-1/4	36-7/8	1/2	2-1/4
	mm	3396	3294	1768	1867	610	1219	224	502	1835	911	13	57

— 43 —

Manufacturer drawing · page 13 · https://tech.lennoxintl.com/C03e7o14l/VIu12Ch2uV/ehb_can_cha11_953_1353_1853_2753_8310.pdf

TOP VIEW · LOOKING DOWN ON THE CURB · TO SCALE

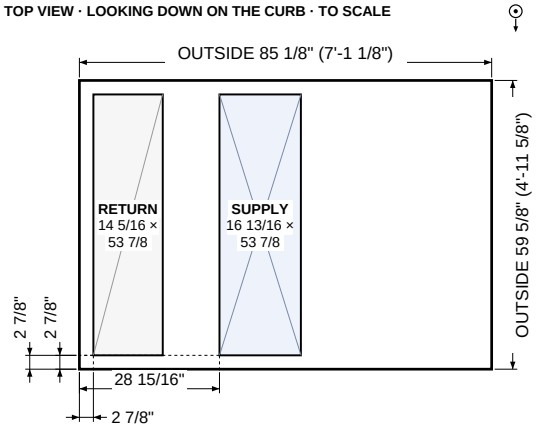

Rail width not documented, so the inside line is not drawn.
Offsets: from the OUTSIDE left end and the OUTSIDE bottom side of the curb to the opening's near edge. Openings are clear inside sizes.
Measure here: OUTSIDE of the curb rail with a tape; unit end not documented.

Lennox VERIFIED
Part # RMF11-135 roof mounting frame (double duct opening)
OUTSIDE 85 1/8 × 59 5/8" · Tons 10 T · legacy
Ref: outside LEFT end (A dimension, length) and BOTTOM side (C dimension, width) as drawn; supply x = J (from inside frame edge) + 2 in. frame leg; K measured from outside edge

SOURCE EXCERPT (left: the cited page of the manufacturer or curb-maker document) beside our TOP VIEW drawing (right, to scale, looking down).
Openings are drawn only where their offsets are documented; offsets run from the OUTSIDE left end and OUTSIDE bottom side. Curb-maker sources are UNVERIFIED.

No source excerpt on file for this curb

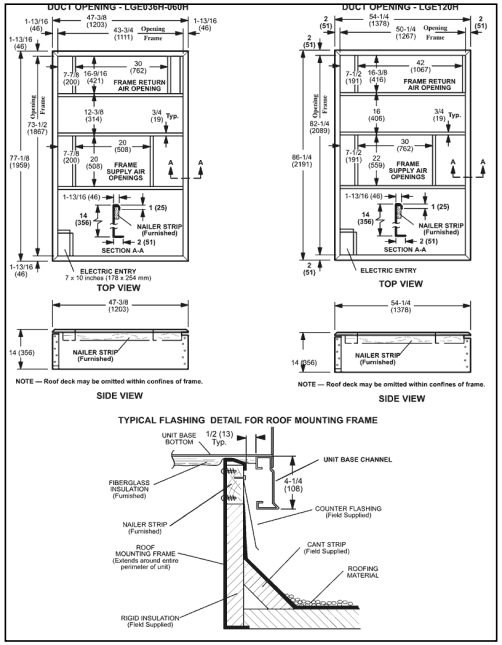

Manufacturer drawing · page 10 · https://tech.lennoxintl.com/C03e7o14l/VIu12Ch2uV/wm_lge_0606.pdf

TOP VIEW · LOOKING DOWN ON THE CURB · TO SCALE

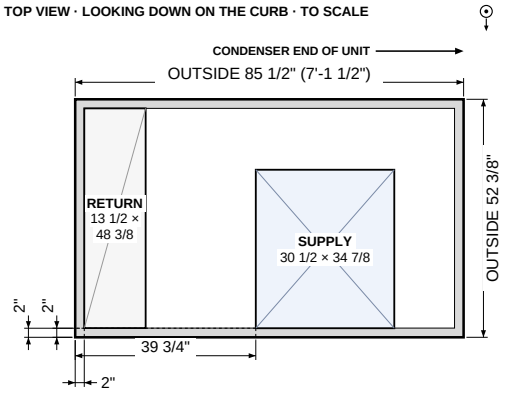

Grey band = curb rail, 2" wide. Inner line = INSIDE of rail: 81 1/2 × 48 3/8" (outside minus 2 × rail, calculated).
Offsets: from the OUTSIDE left end and the OUTSIDE bottom side of the curb to the opening's near edge. Openings are clear inside sizes.
Measure here: OUTSIDE of the curb rail with a tape.

Daikin/Goodman/Amana — CALCULATED
Part # Rebel standard roof curb – medium cabinet (P/N not printed)
OUTSIDE 85 1/2 × 52 3/8" · Height 14, 24 in · 7-15 T · legacy
Ref: x from the return end (opposite the condenser overhang/electrical entrance), y from the LEFT side; return spans full inside width against the end rail; sup_x = 2.0 + 13.5 + 24.25 (derived); 13.25 in left between supply and the far inner rail (81.5 - 68.25)

TOP VIEW · LOOKING DOWN ON THE CURB · TO SCALE

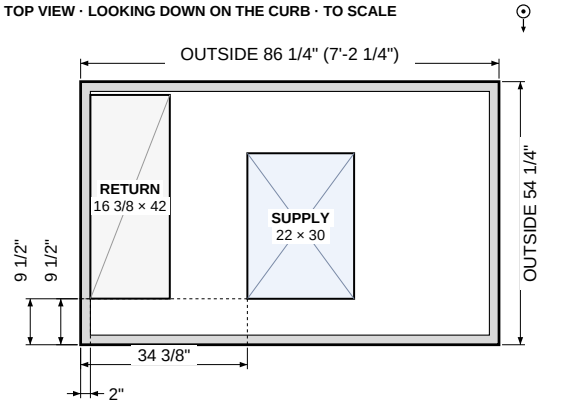

Grey band = curb rail, 2" wide. Inner line = INSIDE of rail: 82 1/4 × 50 1/4" (outside minus 2 × rail, calculated).
Offsets: from the OUTSIDE left end and the OUTSIDE bottom side of the curb to the opening's near edge. Openings are clear inside sizes.
Measure here: OUTSIDE of the curb rail with a tape; unit end not documented.

Lennox — VERIFIED
Part # Roof mounting frame with double duct opening, LGB/LGE120H (14 in); catalog number not printed
OUTSIDE 86 1/4 × 54 1/4" · Height 14 in · 10 T · legacy
Ref: x from return end outside edge, y from the side the 7-1/2 offsets start; derived: 2 in rail + 7-1/2; sup_x = 2+16.375+16

SOURCE EXCERPT (left: the cited page of the manufacturer or curb-maker document) beside our TOP VIEW drawing (right, to scale, looking down).
Openings are drawn only where their offsets are documented; offsets run from the OUTSIDE left end and OUTSIDE bottom side. Curb-maker sources are UNVERIFIED.

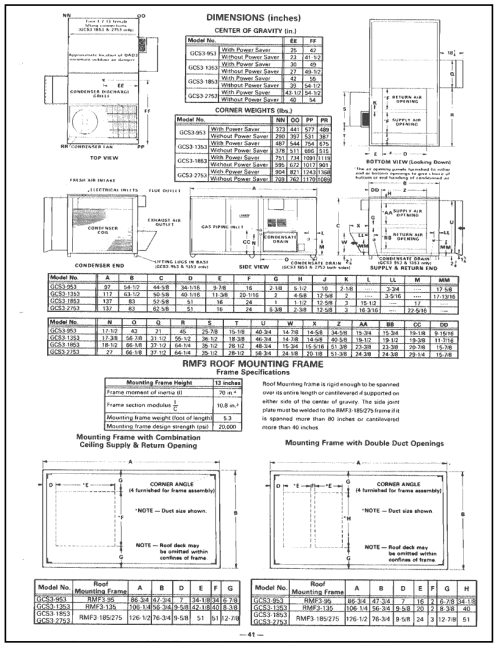
DIMENSIONS (inches)
CENTER OF GRAVITY (in.)
CORNER WEIGHTS (lbs.)
RMF3 ROOF MOUNTING FRAME
Frame Specifications
Mounting Frame with Combination Ceiling Supply & Return Opening
Mounting Frame with Double Duct Openings

Manufacturer drawing · page 5 · https://tech.lennoxintl.com/C03e7o14l/VIu12Ch2uV/us_ehb_gcs3-953-2753_7910.pdf

TOP VIEW · LOOKING DOWN ON THE CURB · TO SCALE

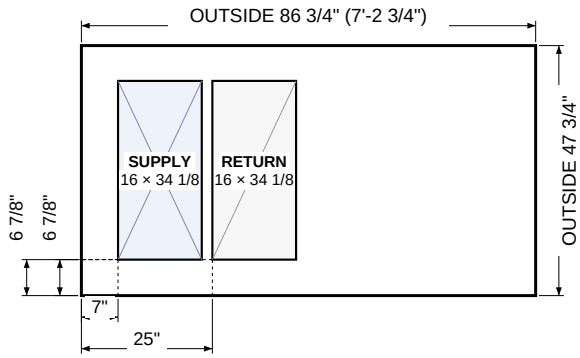

Rail width not documented, so the inside line is not drawn.
Offsets: from the OUTSIDE left end and the OUTSIDE bottom side of the curb to the opening's near edge. Openings are clear inside sizes.
Measure here: OUTSIDE of the curb rail with a tape; unit end not documented.

Lennox — VERIFIED
Part # RMF3-95
OUTSIDE 86 3/4 × 47 3/4" · Height 13 in · Tons 7.5-8 T · legacy
Ref: x from the outside left end (dimension D, then E, F); y = G from the outside bottom side; which of the two openings is supply is not marked on the frame drawing (first opening assigned to sup arbitrarily)

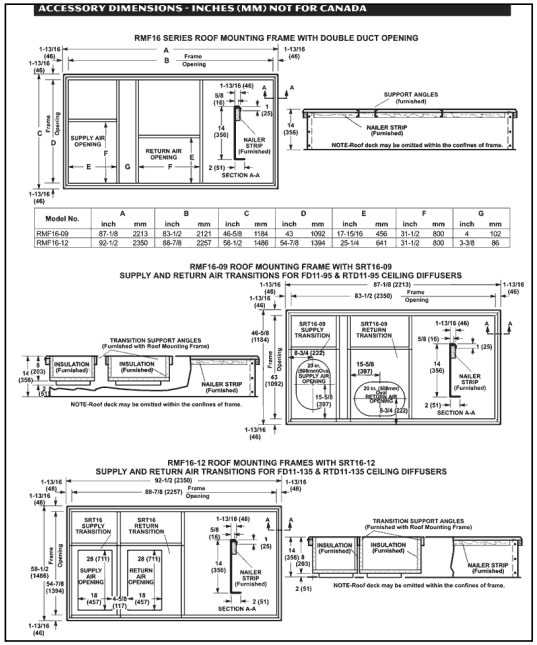
ACCESSORY DIMENSIONS - INCHES (MM) NOT FOR CANADA
RMF16 SERIES ROOF MOUNTING FRAME WITH DOUBLE DUCT OPENING
RMF16-09 ROOF MOUNTING FRAME WITH SRT16-09
SUPPLY AND RETURN AIR TRANSITIONS FOR FD11-95 & RTD11-95 CEILING DIFFUSERS
RMF16-12 ROOF MOUNTING FRAMES WITH SRT16-12
SUPPLY AND RETURN AIR TRANSITIONS FOR FD11-135 & RTD11-135 CEILING DIFFUSERS

Manufacturer drawing · page 17 · https://tech.lennoxintl.com/C03e7o14l/VIu12Ch2uV/ehb_gcs16md_0108.pdf

TOP VIEW · LOOKING DOWN ON THE CURB · TO SCALE

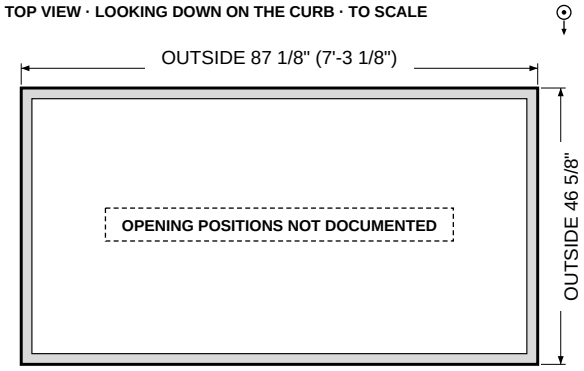

Grey band = curb rail, 1 13/16" wide. Inner line = INSIDE of rail: 83 1/2 × 43" (outside minus 2 × rail, calculated).
Supply opening 17 15/16 × 31 1/2": size documented, position not documented (not drawn).
Return opening 17 15/16 × 31 1/2": size documented, position not documented (not drawn).
Measure here: OUTSIDE of the curb rail with a tape; unit end not documented.

Lennox — VERIFIED
Part # RMF16-09
OUTSIDE 87 1/8 × 46 5/8" · Height 14 in · 6-7.5 T · legacy
Ref: sizes E x F from p17 table (E along length, F across width), G=4 between openings; end/side offsets not printed so x/y left out

SOURCE EXCERPT (left: the cited page of the manufacturer or curb-maker document) beside our TOP VIEW drawing (right, to scale, looking down).
Openings are drawn only where their offsets are documented; offsets run from the OUTSIDE left end and OUTSIDE bottom side. Curb-maker sources are UNVERIFIED.

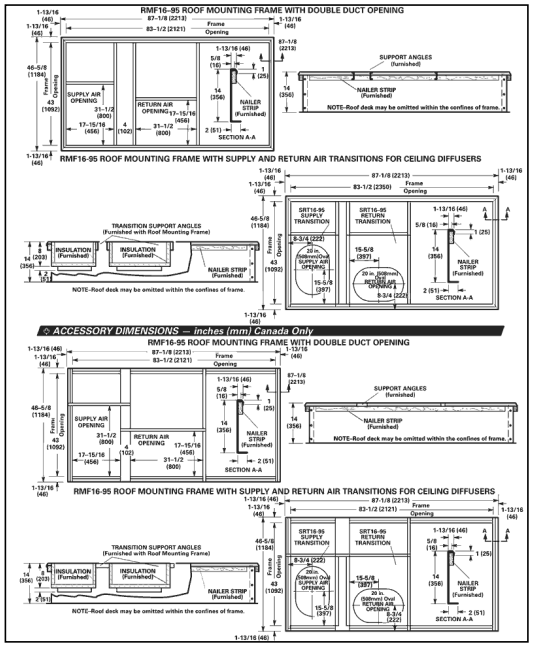

Manufacturer drawing · page 17 · https://tech.lennoxintl.com/C03e7o14l/Vlu12Ch2uV/ehb_gcs24lg_1296.pdf

TOP VIEW · LOOKING DOWN ON THE CURB · TO SCALE

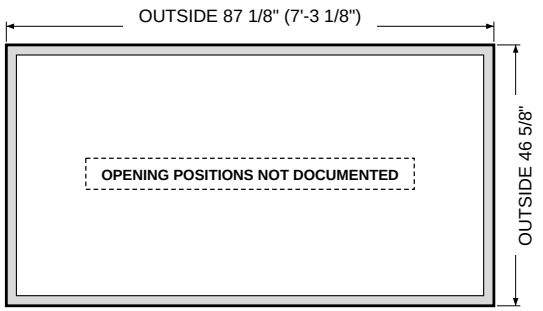

Grey band = curb rail, 1 13/16" wide. Inner line = INSIDE of rail: 83 1/2 × 43" (outside minus 2 × rail, calculated).
Supply opening 17 15/16 × 31 1/2": size documented, position not documented (not drawn).
Return opening 31 1/2 × 17 15/16": size documented, position not documented (not drawn).
Measure here: OUTSIDE of the curb rail with a tape; unit end not documented.

Lennox VERIFIED
Part # RMF16-95 (double duct opening; also with SRT16-95 ceiling-diffuser transitions)
OUTSIDE 87 1/8 × 46 5/8" · Height 14 in · 7.5 T · legacy
Ref: x from the supply end outside edge; chain along length 17-15/16 + 4 + 31-1/2 starts at the frame opening (derived ret_x = 1.8125+17.9375+4); y not dimensioned

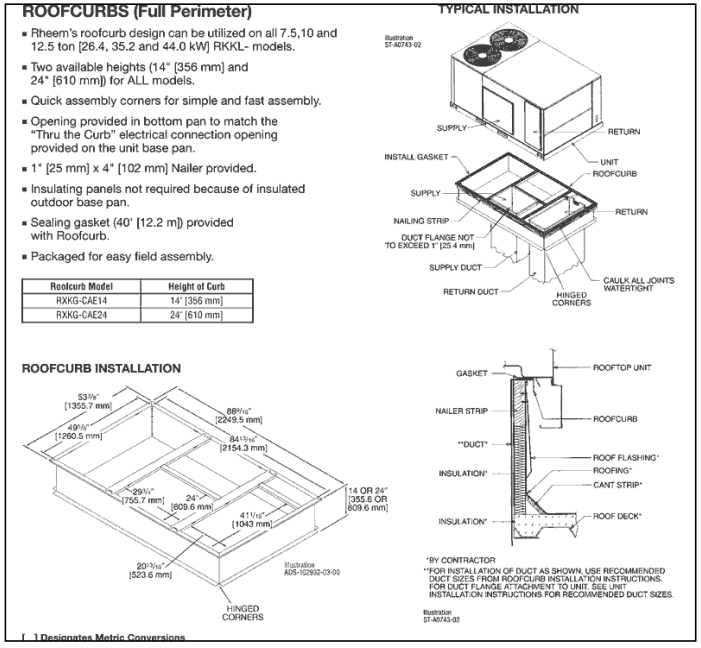

Manufacturer drawing · page 39 · https://resource.gemaire.com/is/content/Watscocom/Gemaire/rheem_rkkl-b090dl15e_article_137451130

TOP VIEW · LOOKING DOWN ON THE CURB · TO SCALE

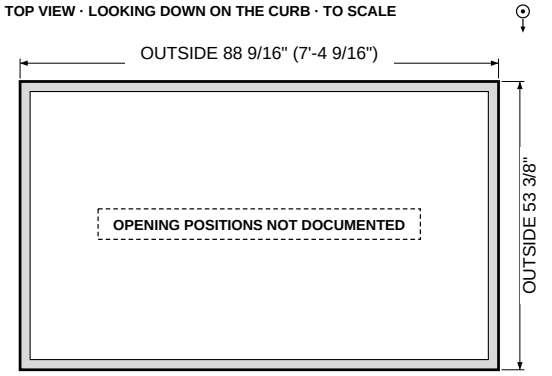

Grey band = curb rail, 1 7/8" wide. Inner line = INSIDE of rail: 84 13/16 × 49 5/8" (outside minus 2 × rail, calculated).
Supply opening 29 3/4 × 24": size documented, position not documented (not drawn).
Return opening 20 13/16 × 41 1/16": size documented, position not documented (not drawn).
Measure here: OUTSIDE of the curb rail with a tape; unit end not documented.

Rheem/Ruud VERIFIED
Part # RXKG-CAE14 / RXKG-CAE24
OUTSIDE 88 9/16 × 53 3/8" · Height 14 / 24 in · 7.5-12.5 T · legacy
Ref: sizes only: same printed duct-support dims (41-1/16, 20-13/16, 29-3/4, 24) as RXKG-BAE ST-A0801-17 where RETURN/SUPPLY are labeled; CAE drawing itself doesn't label which is which (inferred from BAE family, derived)

SOURCE EXCERPT (left: the cited page of the manufacturer or curb-maker document) beside our TOP VIEW drawing (right, to scale, looking down).
Openings are drawn only where their offsets are documented; offsets run from the OUTSIDE left end and OUTSIDE bottom side. Curb-maker sources are UNVERIFIED.

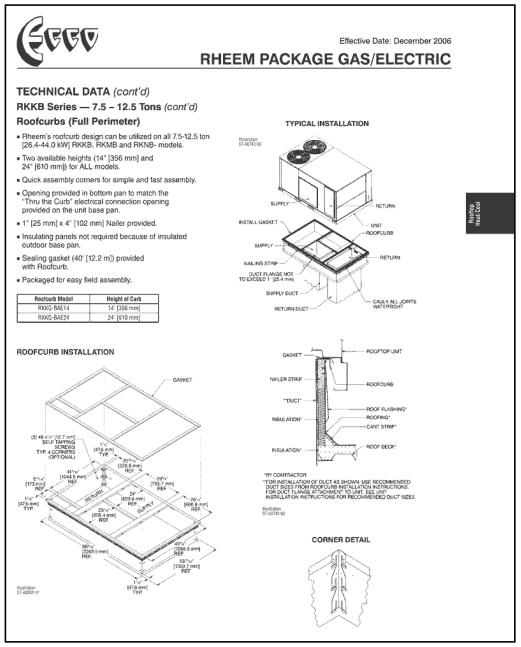

Effective Date: December 2006

RHEEM PACKAGE GAS/ELECTRIC

TECHNICAL DATA *(cont'd)*

RKKB Series — 7.5 – 12.5 Tons *(cont'd)*

Roofcurbs (Full Perimeter)

- Rheem's roofcurb design can be utilized on all 7.5-12.5 ton [26.4-44.0 kW] RKKB, RKMB and RKNB- models.
- Two available heights (14" [356 mm] and 24" [610 mm]) for ALL models.
- Quick assembly corners for simple and fast assembly.
- Opening provided in bottom pan to match the "Thru the Curb" electrical connection opening provided on the unit base pan.
- 1" [25 mm] x 4" [102 mm] Nailer provided.
- Insulating panels not required because of insulated curbtoor base pan.
- Sealing gasket (40' [12.2 m]) provided with Roofcurb.
- Packaged for easy field assembly.

Roofcurb Model	Height of Curb
RXKG-BAE14	14" [356 mm]
RXKG-BAE24	24" [610 mm]

TYPICAL INSTALLATION

ROOFCURB INSTALLATION

CORNER DETAIL

Manufacturer drawing · page 69 · http://www.proairedesign.com/Catalog/Rheem_RKKA.pdf

TOP VIEW · LOOKING DOWN ON THE CURB · TO SCALE

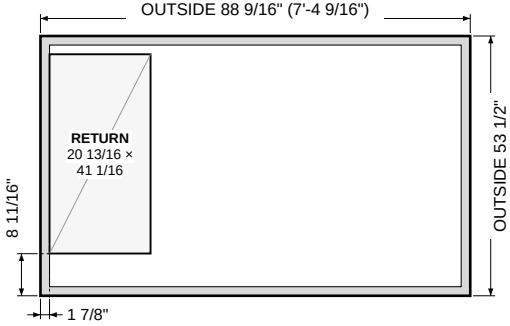

Grey band = curb rail, 1 7/8" wide. Inner line = INSIDE of rail: 84 13/16 × 49 3/4" (outside minus 2 × rail, calculated).
Offsets: from the OUTSIDE left end and the OUTSIDE bottom side of the curb to the opening's near edge. Openings are clear inside sizes.
Supply opening 29 3/4 × 24": size documented, position not documented (not drawn).
Measure here: OUTSIDE of the curb rail with a tape; unit end not documented.

Rheem/Ruud — VERIFIED
Part # RXKG-BAE14 / RXKG-BAE24
OUTSIDE 88 9/16 × 53 1/2" · Height 14 / 24 in · 7.5-12.5 T · legacy
Ref: isometric ST-A0801-17: return at the end edge, x from that (return) end, y from the side on the left looking at that end; ret_y derived 1-7/8 rail + 6-13/16 = 8-11/16, ret_x = rail 1-7/8 (return starts inside the end rail); supply sup_x not closable from printed dims (26-1/4 REF beyond supply shown) so omitted

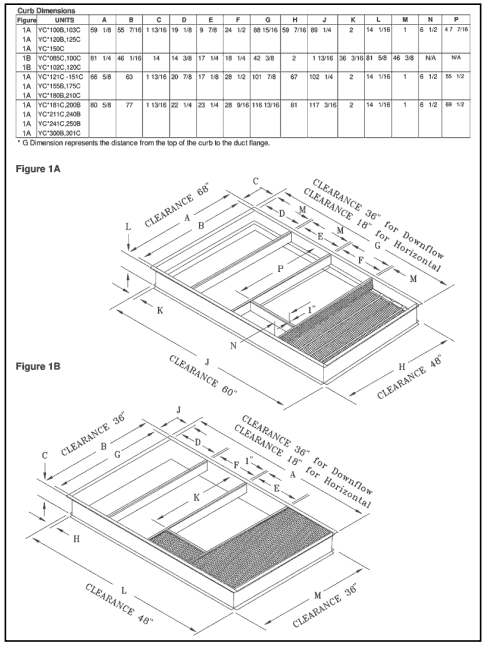

Curb Dimensions

Figure	UNITS	A	B	C	D	E	F	G	H	J	K	L	M	N	P
1A	YC*100B,103C	59 1/8	55 7/16	1 13/16	19 1/8	9 7/8	24 1/2	88 15/16	59 7/16	69 1/4	2	14 1/16	1	6 1/2	47 7/16
1A	YC*120B,125C														
1A	YC*150C														
1B	YC*095C, 100C	81 1/4	46 1/16	1/4	14 3/8	17 1/4	18 1/4	42 3/8	2	1 13/16	36 3/16	81 5/8	46 3/8	N/A	N/A
1B	YC*102C,120C														
1A	YC*121C - 151C	66 5/8	63	1 13/16	20 7/8	17 1/8	28 1/2	101 7/8	67	102 1/4	2	14 1/16	1	6 1/2	55 1/2
1A	YC*155B,175C														
1A	YC*180B,210C														
1A	YC*181C,200B	80 5/8	77	1 13/16	22 1/4	23 1/4	28 9/16	116 13/16	81	117 3/16	2	14 1/16	1	6 1/2	69 1/2
1A	YC*211C,240B														
1A	YC*241C,250B														
1A	YC*300B,301C														

* G Dimension represents the distance from the top of the curb to the duct flange.

Figure 1A

Figure 1B

Manufacturer drawing · page 7 · http://www.delairteam.com/service/techdisk/Commercial/Equipment/Trane/Voyager/Voyager%201998.pdf

TOP VIEW · LOOKING DOWN ON THE CURB · TO SCALE

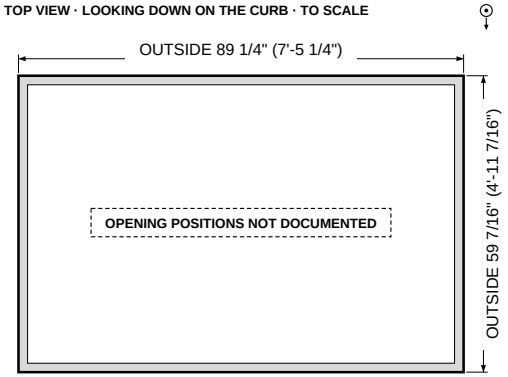

Grey band = curb rail, 1 13/16" wide. Inner line = INSIDE of rail: 85 5/8 × 55 13/16" (outside minus 2 × rail, calculated).
Supply opening 24 1/2 × 47 7/16": size documented, position not documented (not drawn).
Return opening 19 1/8 × 47 7/16": size documented, position not documented (not drawn).
Measure here: OUTSIDE of the curb rail with a tape; unit end not documented.

Trane/American Standard — VERIFIED
Part # BAYCURB025*
OUTSIDE 89 1/4 × 59 7/16" · Height 14.0625 in · 8.3-12.5 T · legacy
Ref: x from outside of base at the return end: (89-1/4-88-15/16)/2 base step + C 1-13/16 + D 19-1/8 + 1 + E 9-7/8 + 1 (derived from p7 table); y not dimensioned (47-7/16 openings within 55-7/16 inside width)

SOURCE EXCERPT (left: the cited page of the manufacturer or curb-maker document) beside our TOP VIEW drawing (right, to scale, looking down).
Openings are drawn only where their offsets are documented; offsets run from the OUTSIDE left end and OUTSIDE bottom side. Curb-maker sources are UNVERIFIED.

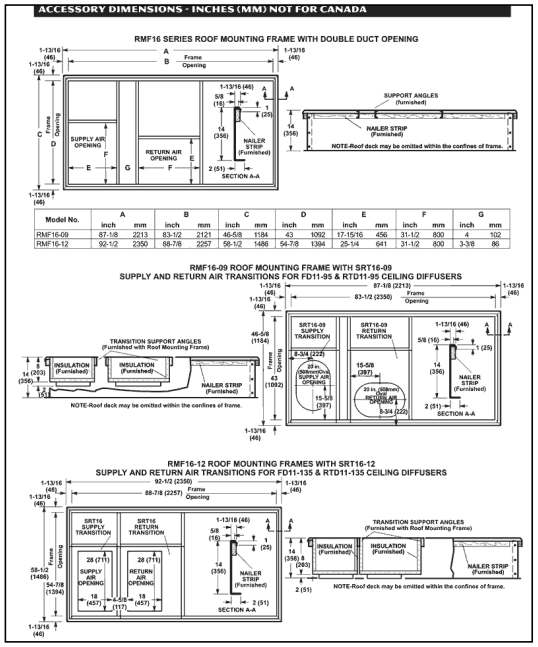

ACCESSORY DIMENSIONS - INCHES (MM) NOT FOR CANADA

RMF16 SERIES ROOF MOUNTING FRAME WITH DOUBLE DUCT OPENING

Model No.	A inch	A mm	B inch	B mm	C inch	C mm	D inch	D mm	E inch	E mm	F inch	F mm	G inch	G mm
RMF16-09	87-1/8	2213	83-1/2	2121	46-5/8	1184	43	1092	17-15/16	456	31-1/2	800	4	102
RMF16-12	92-1/2	2350	88-7/8	2257	58-1/2	1486	54-7/8	1394	25-1/4	641	31-1/2	800	3-3/8	86

RMF16-09 ROOF MOUNTING FRAME WITH SRT16-09
SUPPLY AND RETURN AIR TRANSITIONS FOR FD11-95 & RTD11-95 CEILING DIFFUSERS

RMF16-12 ROOF MOUNTING FRAMES WITH SRT16-12
SUPPLY AND RETURN AIR TRANSITIONS FOR FD11-135 & RTD11-135 CEILING DIFFUSERS

Manufacturer drawing · page 17 · https://tech.lennoxintl.com/C03e7o14l/Vlu12Ch2uV/ehb_gcs16md_0108.pdf

TOP VIEW · LOOKING DOWN ON THE CURB · TO SCALE

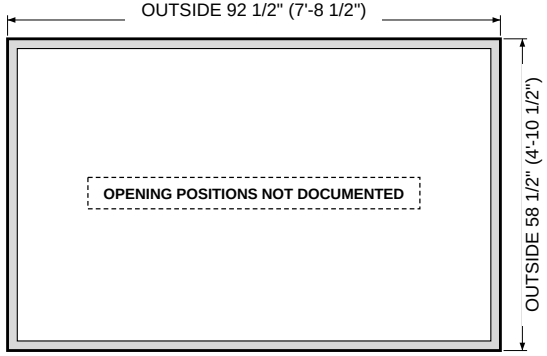

Grey band = curb rail, 1 13/16" wide. Inner line = INSIDE of rail: 88 7/8 × 54 7/8" (outside minus 2 × rail, calculated).
Supply opening 25 1/4 × 31 1/2": size documented, position not documented (not drawn).
Return opening 25 1/4 × 31 1/2": size documented, position not documented (not drawn).
Measure here: OUTSIDE of the curb rail with a tape; unit end not documented.

Lennox **VERIFIED**
Part # RMF16-12
OUTSIDE 92 1/2 × 58 1/2" · Height 14 in · 10-12.5 T · legacy
Ref: sizes E x F from p17 table, G=3-3/8 between; offsets not printed

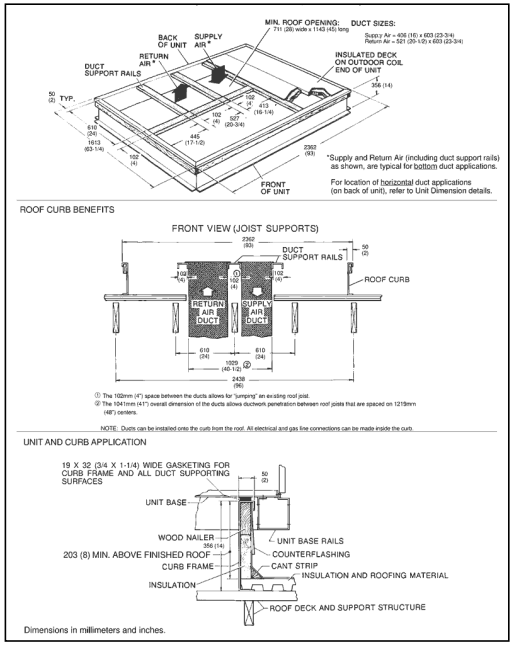

MIN. ROOF OPENING: 711 (28) wide x 1143 (45) long
DUCT SIZES: Supply Air = 406 (16) x 603 (23-3/4) Return Air = 521 (20-1/2) x 603 (23-3/4)

*Supply and Return Air (including duct support rails) as shown, are typical for bottom duct applications.
For location of horizontal duct applications (on back of unit), refer to Unit Dimension details.

ROOF CURB BENEFITS

FRONT VIEW (JOIST SUPPORTS)

① The 102mm (4") space between the ducts allows for "jumping" an existing roof joist.
② The 1041mm (41") overall dimension of the ducts allows ductwork penetration between roof joists that are spaced on 1219mm (48") centers.

NOTE: Ducts can be installed onto the curb from the roof. All electrical and gas line connections can be made inside the curb.

UNIT AND CURB APPLICATION

Dimensions in millimeters and inches.

Manufacturer drawing · page 18 · https://docs.johnsoncontrols.com/chillers/api/khub/documents/b8zjzNUPrrlq5CkXg735Nw/content

TOP VIEW · LOOKING DOWN ON THE CURB · TO SCALE

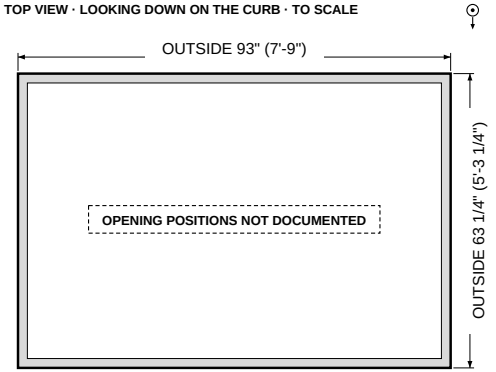

Grey band = curb rail, 2" wide. Inner line = INSIDE of rail: 89 × 59 1/4" (outside minus 2 × rail, calculated).
Supply opening 16 1/4 × 24": size documented, position not documented (not drawn).
Return opening 20 3/4 × 24": size documented, position not documented (not drawn).
Measure here: OUTSIDE of the curb rail with a tape; unit end not documented.

York/JCI **VERIFIED**
Part # unknown (legacy Sunline 2000 7.5-12.5 ton curb)
OUTSIDE 93 × 63 1/4" · Height 14 in · 7.5-12.5 T · legacy
Ref: y from the BACK outside side (2 rail + 24 deep). Along the length from the return end the drawing prints 17-1/2, 20-3/4 return, 4 rail, 16-1/4 supply, 4 rail, but whether 17-1/2 is from the outside or inside of the end rail could not be resolved, so x offsets are omitted. Ducts 20-1/2 x 23-3/4 (R), 16 x 23-3/4 (S). Note: Outside 93 x 63-1/4 confirmed for the US line by York 1RC0472 sheet (existing curb OD = adapter skirt 94 x 64-1/4 less 1 in).

SOURCE EXCERPT (left: the cited page of the manufacturer or curb-maker document) beside our TOP VIEW drawing (right, to scale, looking down).
Openings are drawn only where their offsets are documented; offsets run from the OUTSIDE left end and OUTSIDE bottom side. Curb-maker sources are UNVERIFIED.

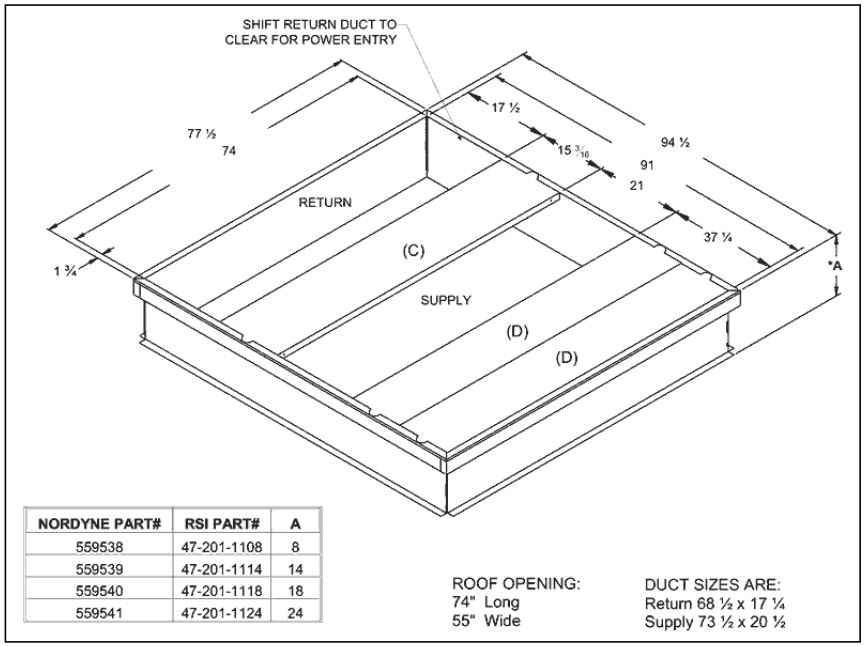

NORDYNE PART#	RSI PART#	A
559538	47-201-1108	8
559539	47-201-1114	14
559540	47-201-1118	18
559541	47-201-1124	24

Manufacturer drawing · page 3 · https://literature.nordyne.com/pdf/122d.pdf?docuid=A5DD9871-3116-489F-AD6B-32BB0DAB6444&brandkey=

TOP VIEW · LOOKING DOWN ON THE CURB · TO SCALE

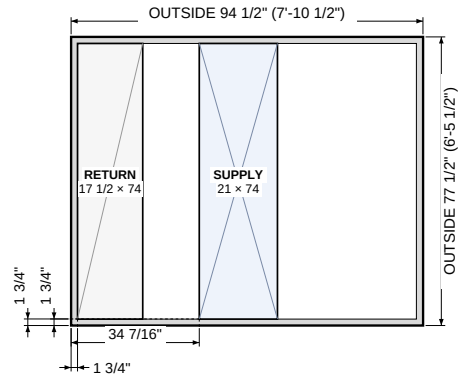

Grey band = curb rail, 1 3/4" wide. Inner line = INSIDE of rail: 91 × 74" (outside minus 2 × rail, calculated).
Offsets: from the OUTSIDE left end and the OUTSIDE bottom side of the curb to the opening's near edge. Openings are clear inside sizes.
Measure here: OUTSIDE of the curb rail with a tape; unit end not documented.

Nordyne VERIFIED
Part # 559538 / 559539 / 559540 / 559541 (8/14/18/24 in; RSI 47-201-1108/1114/1118/1124)
OUTSIDE 94 1/2 × 77 1/2" · Height 8 / 14 / 18 / 24 (18 and 24 special order) in · 12.5-15 T · legacy
Ref: openings span full 74 inside width; x from outside of the return-end short rail; derived = 1.75 rail + 17.5 return + 15-3/16 pan C (chain 17-1/2/15-3/16/21/37-1/4 closes to 91 inside)

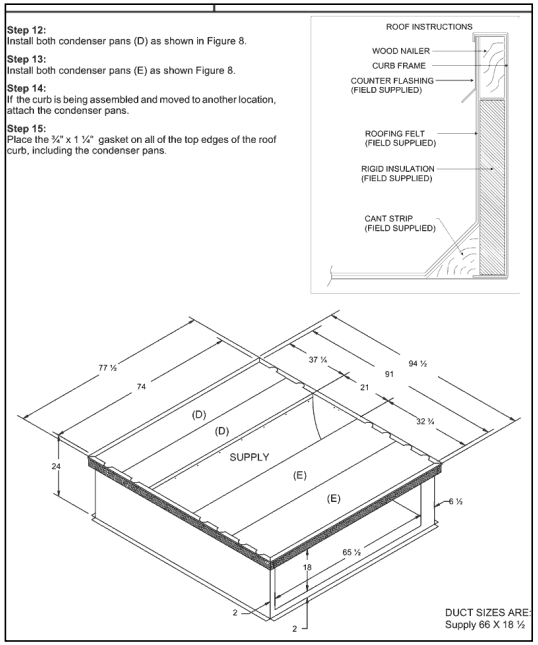

Manufacturer drawing · page 4 · https://literature.nordyne.com/pdf/123d.pdf?docuid=EFAAD0E5-E8CD-4AB9-8A99-2D608AC4FF27&brandke

TOP VIEW · LOOKING DOWN ON THE CURB · TO SCALE

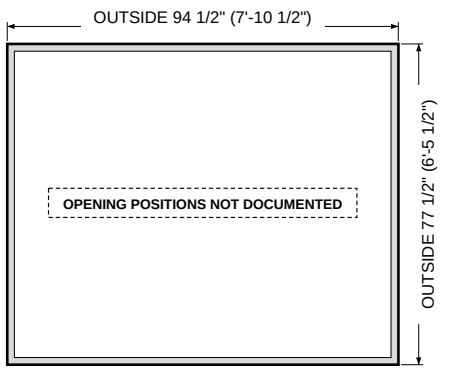

Grey band = curb rail, 1 3/4" wide. Inner line = INSIDE of rail: 91 × 74" (outside minus 2 × rail, calculated).
Supply opening 65 1/2 × 18": size documented, position not documented (not drawn).
Measure here: OUTSIDE of the curb rail with a tape; unit end not documented.

Nordyne VERIFIED
Part # 559542 (horizontal, 24 in) / 559543 (horizontal w/ supply duct, 24 in)
OUTSIDE 94 1/2 × 77 1/2" · Height 24 in · 12.5-15 T · legacy
Ref: supply is a SIDE (horizontal) opening in the short side: sup_len = 65.5 horizontal along that side, sup_wid = 18 tall, 2 in above curb bottom, 2 in from corner; no top openings; top chain from D end: 37-1/4 pans, 21 supply section, 32-3/4 pans (rail 1.75 derived (94.5-91)/2)

SOURCE EXCERPT (left: the cited page of the manufacturer or curb-maker document) beside our TOP VIEW drawing (right, to scale, looking down).
Openings are drawn only where their offsets are documented; offsets run from the OUTSIDE left end and OUTSIDE bottom side. Curb-maker sources are UNVERIFIED.

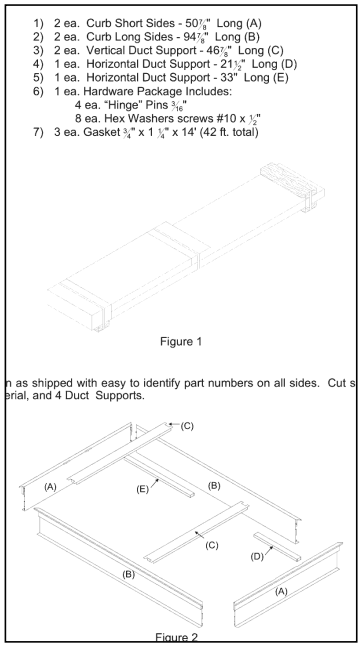

1) 2 ea. Curb Short Sides - 50 7/8" Long (A)
2) 2 ea. Curb Long Sides - 94 7/8" Long (B)
3) 2 ea. Vertical Duct Support - 46 7/8" Long (C)
4) 1 ea. Horizontal Duct Support - 21 1/2" Long (D)
5) 1 ea. Horizontal Duct Support - 33" Long (E)
6) 1 ea. Hardware Package Includes:
   4 ea. "Hinge" Pins 3/16"
   8 ea. Hex Washers screws #10 x 1/2"
7) 3 ea. Gasket 3/4" x 1 1/4" x 14' (42 ft. total)

Figure 1

n as shipped with easy to identify part numbers on all sides. Cut s
erial, and 4 Duct Supports.

(A) (B) (C) (D) (E)

Figure 2

Manufacturer drawing · page 1 · https://files.rheem.com/LiteratureArchive/a606a.pdf

TOP VIEW · LOOKING DOWN ON THE CURB · TO SCALE

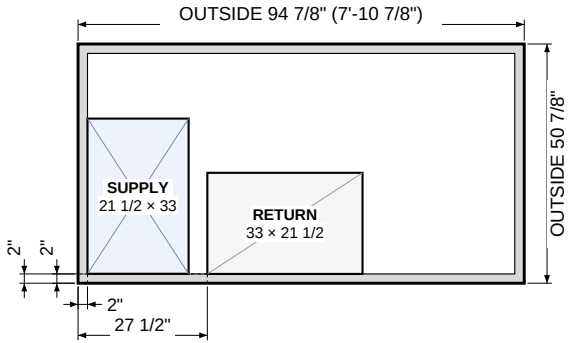

Grey band = curb rail, 2" wide. Inner line = INSIDE of rail: 90 7/8 × 46 7/8" (outside minus 2 × rail, calculated).
Offsets: from the OUTSIDE left end and the OUTSIDE bottom side of the curb to the opening's near edge. Openings are clear inside sizes.
Measure here: OUTSIDE of the curb rail with a tape; unit end not documented.

Rheem/Ruud VERIFIED
Part # 547860 / 547861 / 547862 / 547863
OUTSIDE 94 7/8 × 50 7/8" · 7.5-10 T · legacy
Ref: x from the duct end, y from the long side both openings sit against (bottom in Fig.6); sizes are the bays between supports; ret_x derived 2 rail + 21.5 + 4 = 27.5; closes with 58-1/2 roof opening; rail 2 = (94-7/8 - 90-7/8)/2

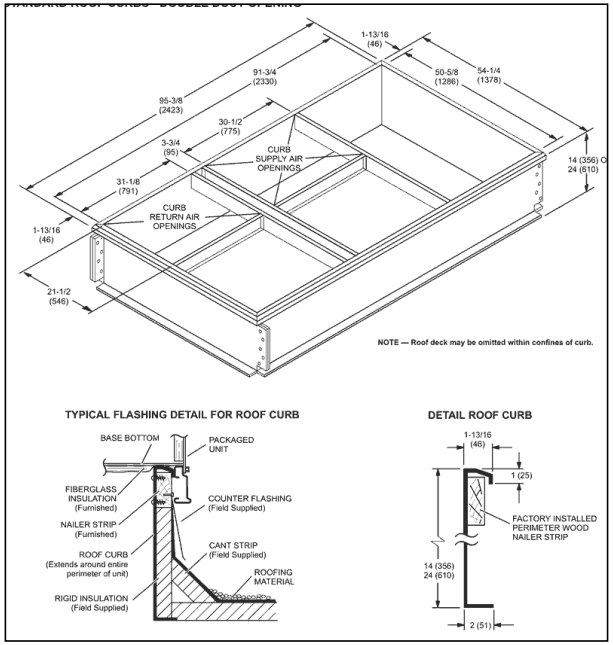

Manufacturer drawing · page 25 · https://tech.lennoxintl.com/C03e7o14l/VIu12Ch2uV/ehb_tg_bbox_0807.pdf

TOP VIEW · LOOKING DOWN ON THE CURB · TO SCALE

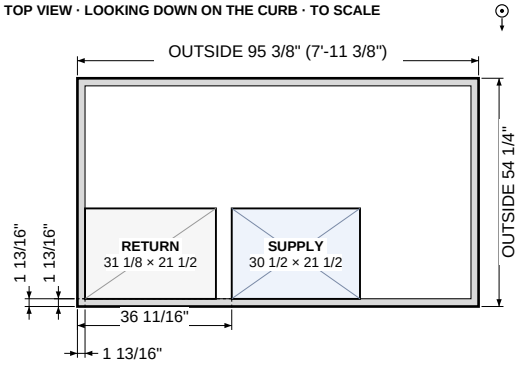

Grey band = curb rail, 1 13/16" wide. Inner line = INSIDE of rail: 91 3/4 × 50 5/8" (outside minus 2 × rail, calculated).
Offsets: from the OUTSIDE left end and the OUTSIDE bottom side of the curb to the opening's near edge. Openings are clear inside sizes.
Measure here: OUTSIDE of the curb rail with a tape; unit end not documented.

Lennox VERIFIED
Part # LARMF10/15S-14 / -18 / -24 (Cliplock 1000); LARMF10/15-14 / -24 (standard); C1CURB40B(-1) 8 in
OUTSIDE 95 3/8 × 54 1/4" · Height 8, 14, 18, 24 in · 7.5-12.5 T · legacy
Ref: x from return end: return against inside of end rail, then 3-3/4 gap (sup_x derived 1-13/16+31-1/8+3-3/4); both openings in one 21-1/2 strip along the same long side (y from that side, derived = rail). Cliplock version prints return 31-3/8 long

SOURCE EXCERPT (left: the cited page of the manufacturer or curb-maker document) beside our TOP VIEW drawing (right, to scale, looking down).
Openings are drawn only where their offsets are documented; offsets run from the OUTSIDE left end and OUTSIDE bottom side. Curb-maker sources are UNVERIFIED.

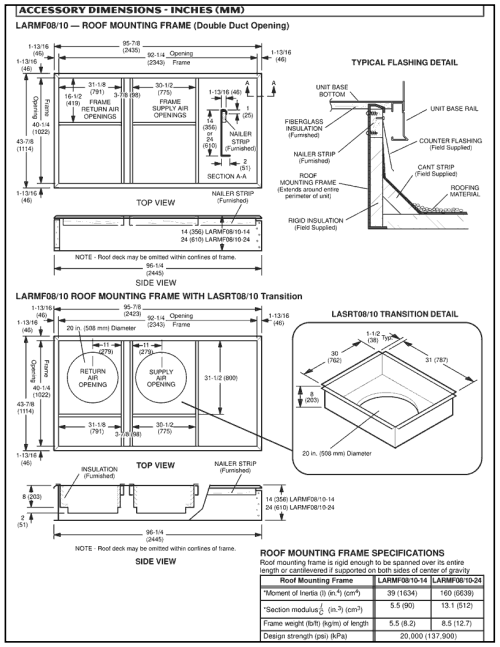
ACCESSORY DIMENSIONS - INCHES (MM)

LARMF08/10 — ROOF MOUNTING FRAME (Double Duct Opening)

TYPICAL FLASHING DETAIL

TOP VIEW

SIDE VIEW

LARMF08/10 ROOF MOUNTING FRAME WITH LASRT08/10 Transition

LASRT08/10 TRANSITION DETAIL

ROOF MOUNTING FRAME SPECIFICATIONS

Roof mounting frame is rigid enough to be spanned over its entire length or cantilevered if supported on both sides of center of gravity

Roof Mounting Frame	LARMF08/10-14	LARMF08/10-24
*Moment of Inertia (I) (in.^{4}) (cm^4)	39 (1634)	160 (6639)
*Section modulus$\frac{I}{c}$ (in.^{3}) (cm^3)	5.5 (90)	13.1 (512)
Frame weight (lb/ft) (kg/m) of length	5.5 (8.2)	8.5 (12.7)
Design strength (psi) (kPa)	20,000 (137,900)	

Manufacturer drawing · page 21 · https://tech.lennoxintl.com/C03e7o14l/Vlu12Ch2uV/50hz_aplusbox_1098.pdf

TOP VIEW · LOOKING DOWN ON THE CURB · TO SCALE

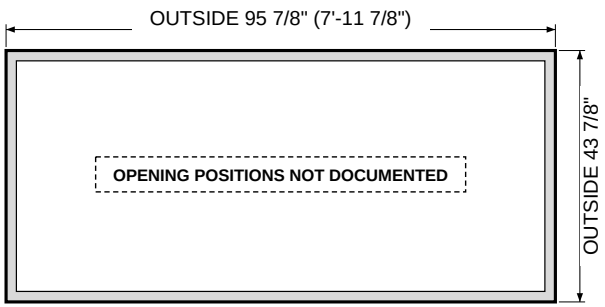

Grey band = curb rail, 1 13/16" wide. Inner line = INSIDE of rail: 92 1/4 × 40 1/4" (outside minus 2 × rail, calculated).
Supply opening 30 1/2 × 16 1/2": size documented, position not documented (not drawn).
Return opening 31 1/8 × 16 1/2": size documented, position not documented (not drawn).
Measure here: OUTSIDE of the curb rail with a tape; unit end not documented.

Lennox VERIFIED
Part # LARMF08/10-14 / LARMF08/10-24 (double duct opening)
OUTSIDE 95 7/8 × 43 7/8" · Height 14 / 24 in · 7.5-8.5 T · legacy
Ref: sizes only; 3-7/8 divider between return and supply along the length; chain start offset not dimensioned

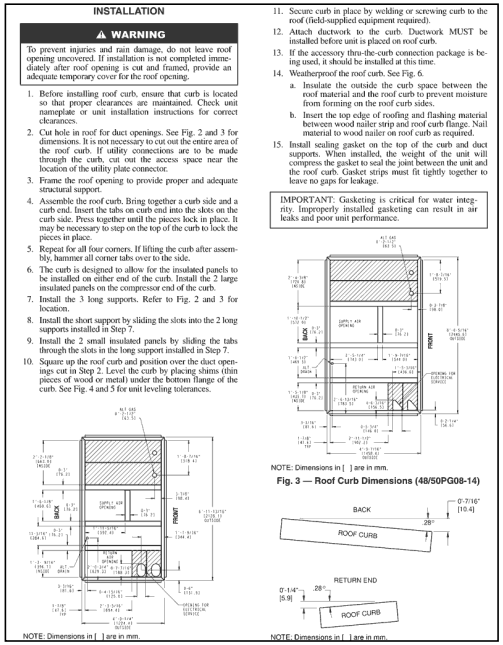
INSTALLATION

⚠ WARNING

To prevent injuries and rain damage, do not leave roof opening uncovered. If installation is not completed immediately after roof opening is cut and framed, provide an adequate temporary cover for the roof opening.

1. Before installing roof curb, ensure that curb is located so that proper clearances are maintained. Check unit nameplate or unit installation instructions for correct clearances.
2. Cut hole in roof for duct openings. See Fig. 2 and 3 for dimensions. It is not necessary to cut out the entire area of the roof curb. If utility connections are to be made through the curb, cut out the access space near the location of the utility plate connector.
3. Frame the roof opening to provide proper and adequate structural support.
4. Assemble the roof curb. Bring together a curb side and a curb end. Insert the tabs on curb end into the slots on the curb side. Press together until the pieces lock in place. It may be necessary to step on the top of the curb to lock the pieces in place.
5. Repeat for all four corners. If lifting the curb after assembly, hammer all corner tabs over to the side.
6. The curb is designed to allow for the insulated panels to be installed on either end of the curb. Install the 2 large insulated panels on the compressor end of the curb.
7. Install the 3 long supports. Refer to Fig. 2 and 3 for location.
8. Install the short support by sliding the slots into the 2 long supports installed in Step 7.
9. Install the 2 small insulated panels by sliding the tabs through the slots in the long support installed in Step 7.
10. Square up the roof curb and position over the duct openings cut in Step 2. Level the curb by placing shims (thin pieces of wood or metal) under the bottom flange of the curb. See Fig. 4 and 5 for unit leveling tolerances.
11. Secure curb in place by welding or screwing curb to the roof (field-supplied equipment required).
12. Attach ductwork to the curb. Ductwork MUST be installed before unit is placed on roof curb.
13. If the accessory thru-the-curb connection package is being used, it should be installed at this time.
14. Weatherproof the roof curb. See Fig. 6.
    a. Insulate the outside the curb space between the roof material and the roof curb to prevent moisture from forming on the roof curb sides.
    b. Insert the top edge of roofing and flashing material between wood nailer strip and roof curb flange. Nail material to wood nailer on roof curb as required.
15. Install sealing gasket on the top of the curb and duct supports. When installed, the weight of the unit will compress the gasket to seal the joint between the unit and the roof curb. Gasket strips must fit tightly together to leave no gaps for leakage.

IMPORTANT: Gasketing is critical for water integrity. Improperly installed gasketing can result in air leaks and poor unit performance.

NOTE: Dimensions in [ ] are in mm.

Fig. 3 — Roof Curb Dimensions (48/50PG08-14)

NOTE: Dimensions in [ ] are in mm.

Manufacturer drawing · page 2 · https://www.shareddocs.com/hvac/docs/1005/Public/00/48_50PG-1SI.pdf

TOP VIEW · LOOKING DOWN ON THE CURB · TO SCALE

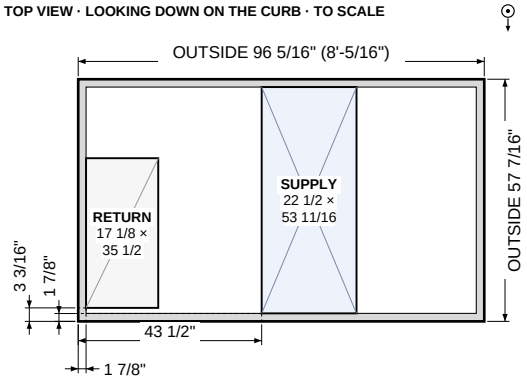

Grey band = curb rail, 1 7/8" wide. Inner line = INSIDE of rail: 92 9/16 × 53 11/16" (outside minus 2 × rail, calculated).
Offsets: from the OUTSIDE left end and the OUTSIDE bottom side of the curb to the opening's near edge. Openings are clear inside sizes.
Measure here: OUTSIDE of the curb rail with a tape; unit end not documented.

Carrier/Bryant/ICP VERIFIED
Part # CRRFCURB031A00 (14 in) / CRRFCURB033A00 (24 in)
OUTSIDE 96 5/16 × 57 7/16" · Height 14, 24 in · Tons 7.5-12.5 T · legacy
Ref: x from the outside of the RETURN END, y from the outside of the BACK side; sup_x derived 1.875+17.125+3+18.5+3 (closes: 43.5+22.5+28.375+1.875 = 96.25 vs 96.3125); sup_wid = 2'-5 1/4 + 3 + 1'-9 7/16 = 53.69 incl. center support; ret_y printed 3-3/16

SOURCE EXCERPT (left: the cited page of the manufacturer or curb-maker document) beside our TOP VIEW drawing (right, to scale, looking down).
Openings are drawn only where their offsets are documented; offsets run from the OUTSIDE left end and OUTSIDE bottom side. Curb-maker sources are UNVERIFIED.

No source excerpt on file for this curb

TOP VIEW · LOOKING DOWN ON THE CURB · TO SCALE

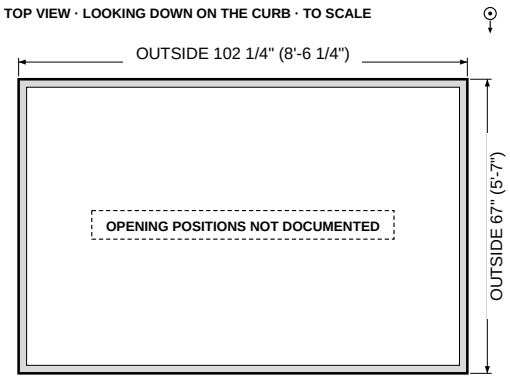

Grey band = curb rail, 1 13/16" wide. Inner line = INSIDE of rail: 98 5/8 × 63 3/8" (outside minus 2 × rail, calculated).
Supply opening 28 1/2 × 55 1/2": size documented, position not documented (not drawn).
Return opening 20 7/8 × 55 1/2": size documented, position not documented (not drawn).
Measure here: OUTSIDE of the curb rail with a tape; unit end not documented.

Trane/American Standard VERIFIED
Part # BAYCURB026B
OUTSIDE 102 1/4 × 67" · Height 14-1/16 in · 12.5 T · legacy
Also OUTSIDE (2nd outline on drawing) 101 7/8 × 66 5/8"
Ref: x from outside of base at the return end: 3/16 base step + C 1-13/16 rail + D 20-7/8 + M 1 + E 17-1/8 + M 1 (derived from Table 1; base-to-inside 2.0 matches (67-63)/2); y not dimensioned (openings 55-1/2 within 63 inside width)

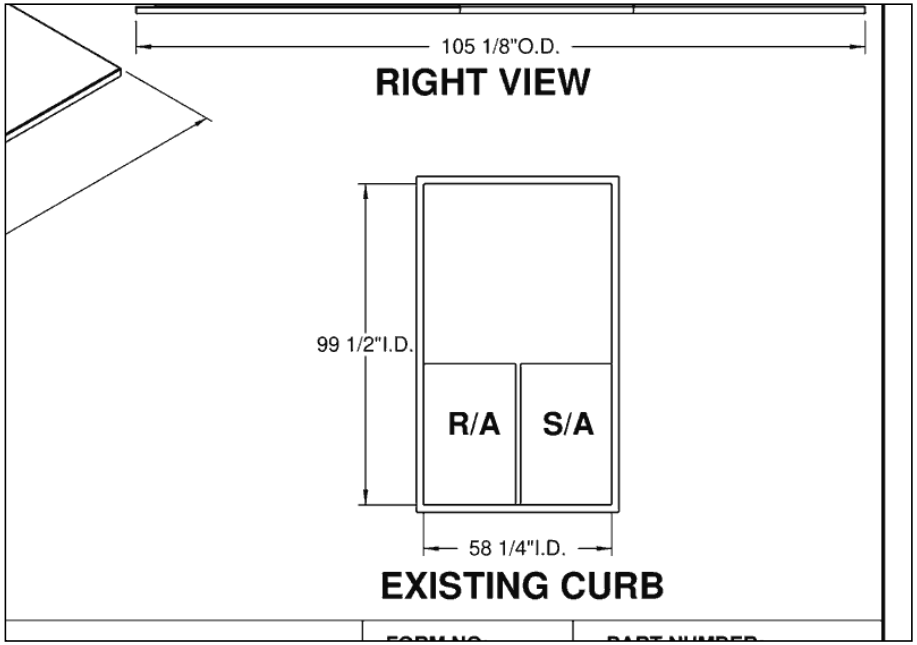

TOP VIEW · LOOKING DOWN ON THE CURB · TO SCALE

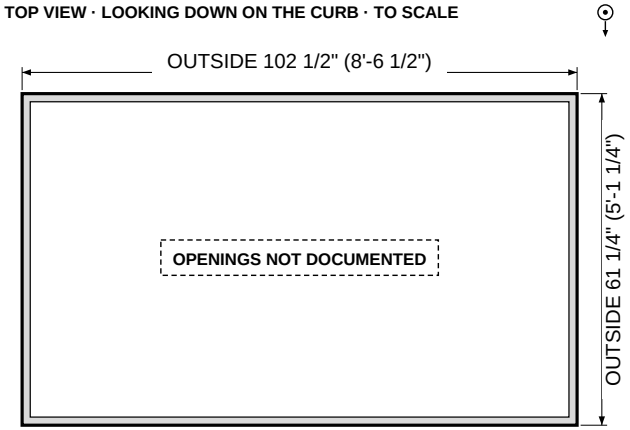

Grey band = curb rail, 1 1/2" wide. Inner line = INSIDE of rail: 99 1/2 × 58 1/4" (outside minus 2 × rail, calculated).
Measure here: OUTSIDE of the curb rail with a tape; unit end not documented.

Trane/American Standard CALCULATED
Part # (factory curb part unknown)
OUTSIDE 102 1/2 × 61 1/4" · Tons 7.5-10 T · legacy
Ref: calc: printed existing-curb INSIDE 99.5 x 58.25 + 2 x 1-1/2 rail (rail as printed on ProVent TRN16)

Curb-maker drawing (UNVERIFIED) · page 1 · https://www.proventusa.com/-/media/provent/catalog/pdf/york-curb-adapters/curb/preda

SOURCE EXCERPT (left: the cited page of the manufacturer or curb-maker document) beside our TOP VIEW drawing (right, to scale, looking down).
Openings are drawn only where their offsets are documented; offsets run from the OUTSIDE left end and OUTSIDE bottom side. Curb-maker sources are UNVERIFIED.

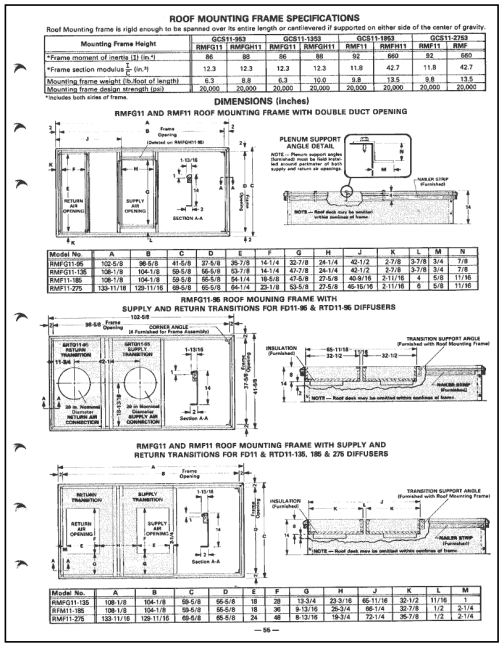

ROOF MOUNTING FRAME SPECIFICATIONS

Roof Mounting frame is rigid enough to be spanned over its entire length or cantilevered if supported on either side of the center of gravity.

Mounting Frame Height	GCS11-953		GCS11-1353		GCS11-1853		GCS11-2753	
	RMFG11	RMFGH11	RMFG11	RMFGH11	RMF11	RMFH11	RMF11	RMF
*Frame moment of inertia (I) (in.⁴)	86	88	86	88	92	660	92	660
*Frame section modulus $\frac{I}{C}$ (in.³)	12.3	12.3	12.3	12.3	11.8	42.7	11.8	42.7
Mounting frame weight (lb./foot of length)	6.3	8.8	6.3	10.0	8.8	13.5	8.8	13.5
Mounting frame design strength (psi)	20,000	20,000	20,000	20,000	20,000	20,000	20,000	20,000

*Includes both sides of frame.

DIMENSIONS (inches)

RMFG11 AND RMF11 ROOF MOUNTING FRAME WITH DOUBLE DUCT OPENING

PLENUM SUPPORT ANGLE DETAIL

Model No.	A	B	C	D	E	F	G	H	J	K	L	M	N
RMFG11-95	102-5/8	98-5/8	41-5/8	27-5/8	35-7/8	14-1/4	32-7/8	24-1/4	42-1/2	2-7/8	3-7/8	3/4	7/8
RMFG11-135	108-1/8	104-1/8	59-5/8	55-5/8	53-7/8	14-1/4	47-7/8	24-1/4	42-1/2	2-7/8	3-7/8	3/4	7/8
RMF11-185	108-1/8	104-1/8	59-5/8	55-5/8	64-1/4	16-5/8	47-5/8	27-5/8	49-5/16	2-11/16	4	5/8	11/16
RMF11-275	133-11/16	129-11/16	69-5/8	65-5/8	64-1/4	23-1/8	53-5/8	27-5/8	45-15/16	2-11/16	6	5/8	11/16

RMFG11-95 ROOF MOUNTING FRAME WITH SUPPLY AND RETURN TRANSITIONS FOR FD11-95 & RTD11-95 DIFFUSERS

RMFG11 AND RMF11 ROOF MOUNTING FRAME WITH SUPPLY AND RETURN TRANSITIONS FOR FD11 & RTD11-135, 185 & 275 DIFFUSERS

Model No.	A	B	C	D	E	F	G	H	J	K	L	M
RMFG11-135	108-1/8	104-1/8	59-5/8	55-5/8	18	28	13-3/4	23-3/16	65-11/16	32-1/2	11/16	1
RMF11-185	108-1/8	104-1/8	59-5/8	55-5/8	18	36	9-13/16	29-3/4	86-1/4	32-7/8	1/2	2-1/4
RMF11-275	133-11/16	129-11/16	69-5/8	65-5/8	24	48	8-13/16	19-3/4	72-1/4	35-7/8	1/2	2-1/4

— 55 —

Manufacturer drawing · page 11 · https://tech.lennoxintl.com/C03e7o14l/VIu12Ch2uV/us_ehb_gcs11_8402.pdf

TOP VIEW · LOOKING DOWN ON THE CURB · TO SCALE

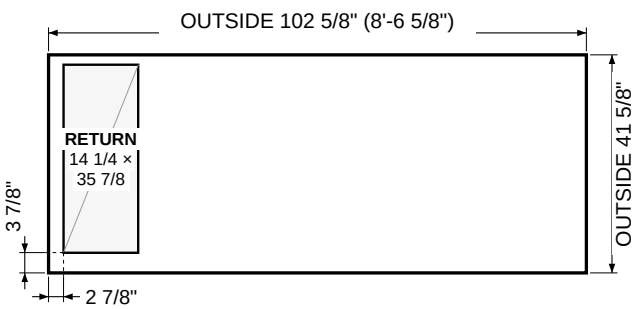

Rail width not documented, so the inside line is not drawn.

Offsets: from the OUTSIDE left end and the OUTSIDE bottom side of the curb to the opening's near edge. Openings are clear inside sizes.

Supply opening 24 1/4 × 32 7/8": size documented, position not documented (not drawn).

Measure here: OUTSIDE of the curb rail with a tape; unit end not documented.

Lennox VERIFIED
Part # RMFG11-95 (RMFGH11-95 horizontal)
OUTSIDE 102 5/8 × 41 5/8" · Height 14 in · Tons 7.5-8 T · legacy
Ref: x from outside left (return) end: return at K, supply at J; return y = L from outside bottom side; supply y not printed

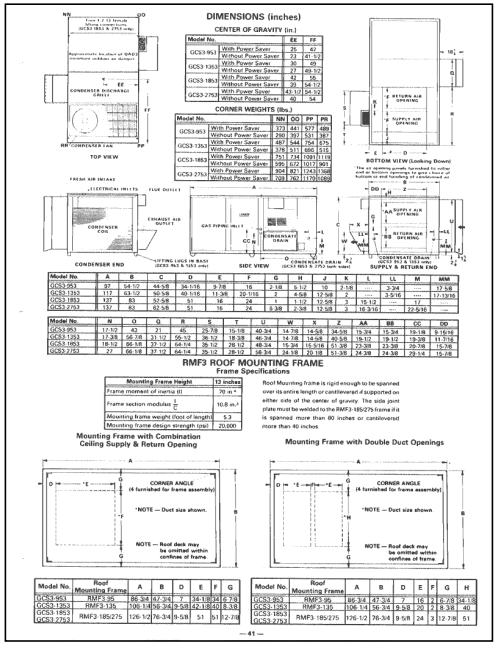

DIMENSIONS (inches)

CENTER OF GRAVITY (in.)

Model No.		EE	FF
GCS3-953	With Power Saver	25	42
	Without Power Saver	23	41 1/2
GCS3-1353	With Power Saver	30	49
	Without Power Saver	27	48 1/2
GCS3-1853	With Power Saver	42	56
	Without Power Saver	39	54 1/2
GCS3-2753	With Power Saver	43 1/2	54 1/2
	Without Power Saver	40	54

CORNER WEIGHTS (lbs.)

Model No.		NN	OO	PP	PS
GCS3-953	With Power Saver	370	441	577	489
	Without Power Saver	298	397	531	387
GCS3-1353	With Power Saver	467	544	794	675
	Without Power Saver	378	511	686	515
GCS3-1853	With Power Saver	751	726	1061	1116
	Without Power Saver	595	672	1017	961
GCS3-2753	With Power Saver	894	871	1243	1348
	Without Power Saver	708	762	1170	1260

TOP VIEW

BOTTOM VIEW (Looking Down)

SIDE VIEW

SUPPLY & RETURN ENDS

CONDENSER END

Model No.	A	B	C	D	E	F	G	H	J	K	L	LL	M	MM
GCS3-953	87	54-1/2	44-5/8	36-1/16	9-7/8	16	2-1/8	5-1/2	16	7-1/8	----	2-3/4	----	17-5/8
GCS3-1353	117	83-1/2	50-5/8	40-1/16	11-3/8	20-1/16	2	4-6/8	17-5/8	2	----	3-5/16	----	17-13/16
GCS3-1852	137	83	57-5/8	51	16	24	1	1-1/2	17-5/8	3	15-1/2	----	12	----
GCS3-2753	137	83	62-5/8	51	16	24	1-3/8	2-3/8	17-5/8	3	16-3/16	----	12-5/16	----

Model No.	N	O	Q	R	S	T	U	W	X	Z	AA	BB	CC	DD
GCS3-953	17-1/2	43	31	45	29-7/8	15-1/8	40-3/4	14-7/8	14-5/8	34-5/8	19-3/4	15-3/4	19-1/8	9 15/16
GCS3-1353	17-3/8	66-7/8	31-1/2	55-1/2	36-1/2	18-3/8	46-3/4	14-7/8	14-5/8	40-5/8	19-1/2	19-1/2	19-3/8	11-7/16
GCS3-1853	18-1/2	66-1/8	37-1/2	64-1/4	36-1/2	28-1/2	48-3/4	15-3/4	15-5/16	61-3/8	23-3/8	23-3/8	20-7/8	15-7/8
GCS3-2753	27	66-1/8	37-1/2	64-1/4	35-1/2	28-1/2	48-3/4	24-1/8	23-7/8	61-3/8	24-3/8	24-3/8	20-1/4	15-7/8

RMF3 ROOF MOUNTING FRAME

Frame Specifications

Mounting Frame Height	13 inches
Frame moment of inertia (I)	70 in.⁴
Frame section modulus $\frac{I}{C}$	10.8 in.³
Mounting frame weight (foot of length)	5.3
Mounting frame design strength (psi)	20,000

Roof Mounting Frame is rigid enough to be spanned over its entire length or cantilevered if supported on either side of the center of gravity. The side joint plate must be welded to the RMF3-185/275 frame if it is spanned more than 80 inches or cantilevered more than 40 inches.

Mounting Frame with Combination Ceiling Supply & Return Opening

Mounting Frame with Double Duct Openings

Model No.	Roof Mounting Frame	A	B	D	E	F	G
GCS3-953	RMF3-95	86-3/4	47-3/4	7	34-1/8	34	6-7/8
GCS3-1353	RMF3-135	106-1/4	56-3/4	9-5/8	52-1/8	40	8-3/8
GCS3-1853	RMF3-185/275	126-1/2	76-3/4	9-5/8	51	51	2-7/8
GCS3-2753							

Model No.	Roof Mounting Frame	A	B	D	E	F	G	H
GCS3-953	RMF3-95	86-3/4	47-3/4	7	16	2	6-7/8	34-1/8
GCS3-1353	RMF3-135	106-1/4	56-3/4	9-5/8	20	2	8-3/8	40
GCS3-1853 GCS3-2753	RMF3-185/275	126-1/2	76-3/4	9-5/8	24	3	12-7/8	51

— 41 —

Manufacturer drawing · page 5 · https://tech.lennoxintl.com/C03e7o14l/VIu12Ch2uV/us_ehb_gcs3-953-2753_7910.pdf

TOP VIEW · LOOKING DOWN ON THE CURB · TO SCALE

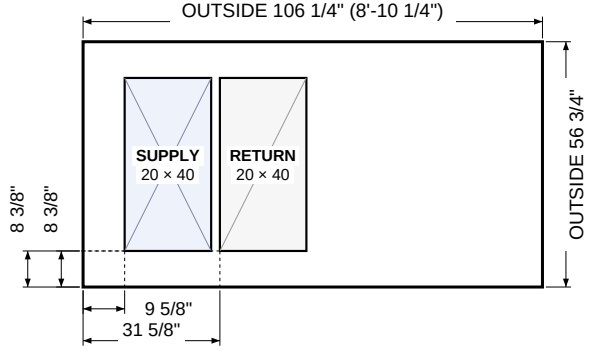

Rail width not documented, so the inside line is not drawn.

Offsets: from the OUTSIDE left end and the OUTSIDE bottom side of the curb to the opening's near edge. Openings are clear inside sizes.

Measure here: OUTSIDE of the curb rail with a tape; unit end not documented.

Lennox VERIFIED
Part # RMF3-135
OUTSIDE 106 1/4 × 56 3/4" · Height 13 in · Tons 10-11 T · legacy
Ref: x from the outside left end (dimension D, then E, F); y = G from the outside bottom side; which of the two openings is supply is not marked on the frame drawing (first opening assigned to sup arbitrarily)

SOURCE EXCERPT (left: the cited page of the manufacturer or curb-maker document) beside our TOP VIEW drawing (right, to scale, looking down).
Openings are drawn only where their offsets are documented; offsets run from the OUTSIDE left end and OUTSIDE bottom side. Curb-maker sources are UNVERIFIED.

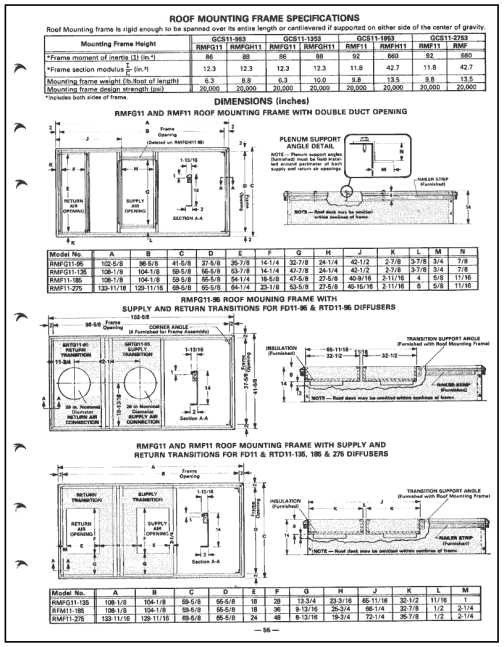

ROOF MOUNTING FRAME SPECIFICATIONS

Roof Mounting frame is rigid enough to be spanned over its entire length or cantilevered if supported on either side of the center of gravity.

Mounting Frame Height	GCS11-063		GCS11-1353		GCS11-1953		GCS11-2763	
	RMFG11	RMFGH11	RMFG11	RMFGH11	RMF11	RMFH11	RMF11	RMF
*Frame moment of inertia (I) (in.⁴)	86	88	86	88	92	660	92	660
*Frame section modulus S= (in.³)	12.3	12.3	12.3	12.3	11.8	42.7	11.8	42.7
Mounting frame weight (lb./foot of length)	6.3	8.8	6.3	10.0	9.8	13.5	9.8	13.5
Mounting frame design strength (psi)	20,000	20,000	20,000	20,000	20,000	20,000	20,000	20,000

*Includes both sides of frame.

DIMENSIONS (inches)

RMFG11 AND RMF11 ROOF MOUNTING FRAME WITH DOUBLE DUCT OPENING

PLENUM SUPPORT ANGLE DETAIL

Model No.	A	B	C	D	E	F	G	H	J	K	L	M	N
RMFG11-05	102-5/8	98-5/8	41-5/8	37-5/8	35-7/8	14-1/4	32-7/8	24-1/4	42-1/2	2-7/8	3-7/8	3/4	7/8
RMFG11-135	108-1/8	104-1/8	59-5/8	55-5/8	53-7/8	14-1/4	47-7/8	24-1/4	42-1/2	2-7/8	3-7/8	3/4	7/8
RMF11-185	108-1/8	104-1/8	59-5/8	55-5/8	54-1/4	16-5/8	47-5/8	27-5/8	40-9/16	2-11/16	4	5/8	11/16
RMF11-275	133-11/16	129-11/16	69-5/8	65-5/8	64-1/4	23-1/8	53-5/8	27-5/8	45-15/16	2-11/16	6	5/8	11/16

RMFG11-96 ROOF MOUNING FRAME WITH SUPPLY AND RETURN TRANSITIONS FOR FD11-96 & RTD11-96 DIFFUSERS

RMFG11 AND RMF11 ROOF MOUNTING FRAME WITH SUPPLY AND RETURN TRANSITIONS FOR FD11 & RTD11-135, 185 & 275 DIFFUSERS

Model No.	A	B	C	D	E	F	G	H	J	K	L	M
RMFG11-135	108-1/8	104-1/8	59-5/8	55-5/8	18	28	13-3/4	23-3/16	65-11/16	32-1/2	11/16	1
RMF11-185	108-1/8	104-1/8	59-5/8	55-5/8	18	36	9-13/16	29-3/4	86-1/4	32-7/8	1/2	2-1/4
RMF11-275	133-11/16	129-11/16	69-5/8	65-5/8	24	48	9-13/16	19-3/4	72-1/4	35-7/8	1/2	2-1/4

— 55 —

Manufacturer drawing · page 11 · https://tech.lennoxintl.com/C03e7o14l/Vlu12Ch2uV/us_ehb_gcs11_8402.pdf

TOP VIEW · LOOKING DOWN ON THE CURB · TO SCALE

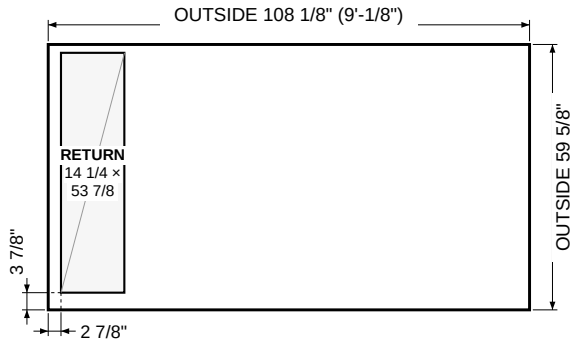

Rail width not documented, so the inside line is not drawn.
Offsets: from the OUTSIDE left end and the OUTSIDE bottom side of the curb to the opening's near edge. Openings are clear inside sizes.
Supply opening 24 1/4 × 47 7/8": size documented, position not documented (not drawn).
Measure here: OUTSIDE of the curb rail with a tape; unit end not documented.

Lennox VERIFIED
Part # RMFG11-135 (RMFGH11-135 horizontal)
OUTSIDE 108 1/8 × 59 5/8" · Height 14 in · Tons 10-11 T · legacy
Ref: x from outside left (return) end: return at K, supply at J; return y = L from outside bottom side; supply y not printed

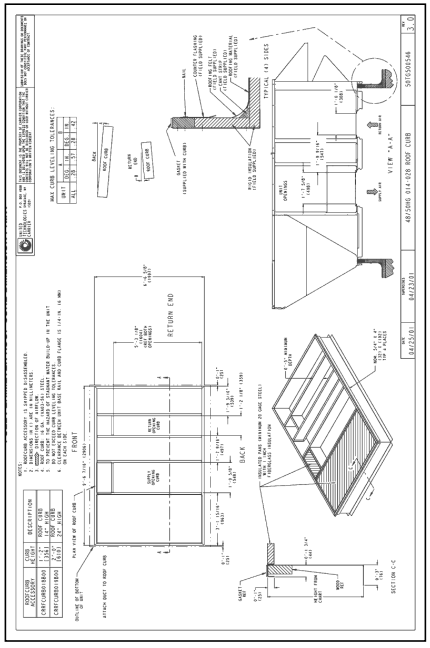

Manufacturer drawing · page 6 · https://www.shareddocs.com/hvac/docs/1005/Public/0E/48_50HG-3SB.pdf

TOP VIEW · LOOKING DOWN ON THE CURB · TO SCALE

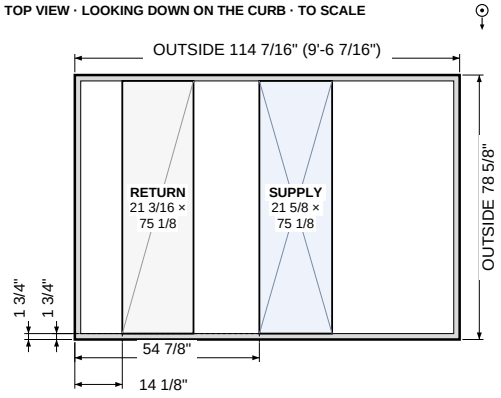

Grey band = curb rail, 1 3/4" wide. Inner line = INSIDE of rail: 110 15/16 × 75 1/8" (outside minus 2 × rail, calculated).
Offsets: from the OUTSIDE left end and the OUTSIDE bottom side of the curb to the opening's near edge. Openings are clear inside sizes.
Measure here: OUTSIDE of the curb rail with a tape; unit end not documented.

Carrier/Bryant/ICP VERIFIED
Part # CRRFCURB018B00 (14 in) / CRRFCURB019B00 (24 in)
OUTSIDE 114 7/16 × 78 5/8" · Height 14, 24 in · Tons 12.5-25 T · legacy
Ref: x from the outside of the RETURN END; plan chain 1'-2 1/8 + return curb 1'-9 3/16 + 1'-7 9/16 + supply curb 1'-9 5/8 + 3'-1 15/16 = 114.4375 closes exactly to 9'-6 7/16; widths derived 78.625 - 2x1.75 (Section C-C rail 0'-1 3/4) - opening-curb bands span the inside width

SOURCE EXCERPT (left: the cited page of the manufacturer or curb-maker document) beside our TOP VIEW drawing (right, to scale, looking down).
Openings are drawn only where their offsets are documented; offsets run from the OUTSIDE left end and OUTSIDE bottom side. Curb-maker sources are UNVERIFIED.

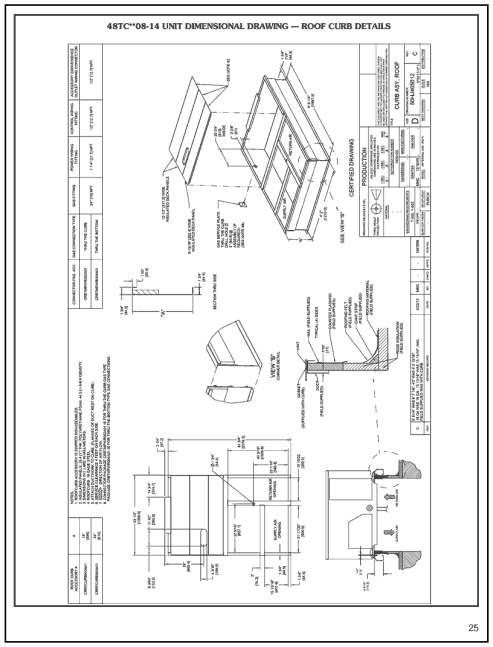

Manufacturer drawing · page 25 · https://www.shareddocs.com/hvac/docs/1005/public/05/48tc-7-16-03pd.pdf

TOP VIEW · LOOKING DOWN ON THE CURB · TO SCALE

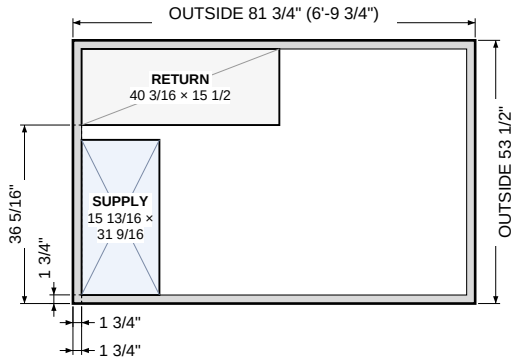

Grey band = curb rail, 1 3/4" wide. Inner line = INSIDE of rail: 78 1/4 × 50" (outside minus 2 × rail, calculated).
Offsets: from the OUTSIDE left end and the OUTSIDE bottom side of the curb to the opening's near edge. Openings are clear inside sizes.
Measure here: OUTSIDE of the curb rail with a tape; unit end not documented.

Carrier/Bryant/ICP VERIFIED
Part # CRRFCURB003A01 (14 in) / CRRFCURB004A01 (24 in)
OUTSIDE 81 3/4 × 53 1/2" · Height 14 / 24 in · Tons 7.5-12.5 T
Also OUTSIDE (2nd outline on drawing) 78 1/4 × 50"
Ref: x from the opening end, y from the supply side, both from the plan-view outline (81.75 x 53.5); 1.75 rail band printed; ret_y derived 1.75+31.53+3.00 (divider 3.00 derived = 50.0-31.53-15.47, closes)

No source excerpt on file for this curb

TOP VIEW · LOOKING DOWN ON THE CURB · TO SCALE

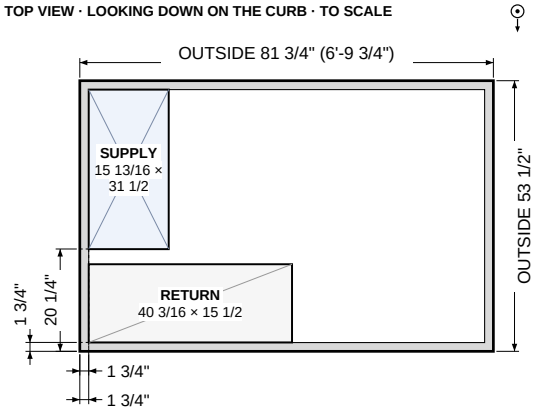

Grey band = curb rail, 1 3/4" wide. Inner line = INSIDE of rail: 78 1/4 × 50" (outside minus 2 × rail, calculated).
Offsets: from the OUTSIDE left end and the OUTSIDE bottom side of the curb to the opening's near edge. Openings are clear inside sizes.
Measure here: OUTSIDE of the curb rail with a tape; unit end not documented.

York/JCI VERIFIED
Part # 1RC0457 (14 in) / 1RC0459 (24 in)
OUTSIDE 81 3/4 × 53 1/2" · Height 14 / 24 in · 6.5-12.5 T
Ref: x from RIGHT outside end (openings end), y from BACK outside side; offsets derived = 1.75 rail; sup_y derived 1.75+15.469+3.000 (closes: +31.531+1.75 = 53.5 O.D.)

SOURCE EXCERPT (left: the cited page of the manufacturer or curb-maker document) beside our TOP VIEW drawing (right, to scale, looking down).
Openings are drawn only where their offsets are documented; offsets run from the OUTSIDE left end and OUTSIDE bottom side. Curb-maker sources are UNVERIFIED.

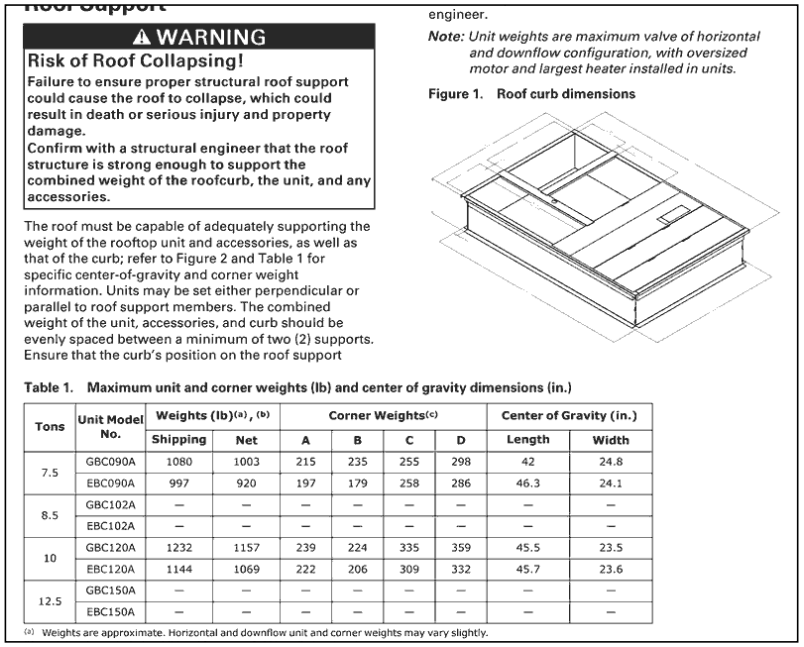

Roof Support

⚠ WARNING

Risk of Roof Collapsing!

Failure to ensure proper structural roof support could cause the roof to collapse, which could result in death or serious injury and property damage.
Confirm with a structural engineer that the roof structure is strong enough to support the combined weight of the roofcurb, the unit, and any accessories.

The roof must be capable of adequately supporting the weight of the rooftop unit and accessories, as well as that of the curb; refer to Figure 2 and Table 1 for specific center-of-gravity and corner weight information. Units may be set either perpendicular or parallel to roof support members. The combined weight of the unit, accessories, and curb should be evenly spaced between a minimum of two (2) supports. Ensure that the curb's position on the roof support engineer.

Note: Unit weights are maximum valve of horizontal and downflow configuration, with oversized motor and largest heater installed in units.

Figure 1. Roof curb dimensions

Table 1. Maximum unit and corner weights (lb) and center of gravity dimensions (in.)

Tons	Unit Model No.	Weights (lb)[a], [b]		Corner Weights[c]				Center of Gravity (in.)	
		Shipping	Net	A	B	C	D	Length	Width
7.5	GBC090A	1080	1003	215	235	255	298	42	24.8
	EBC090A	997	920	197	179	258	286	46.3	24.1
8.5	GBC102A	—	—	—	—	—	—	—	—
	EBC102A	—	—	—	—	—	—	—	—
10	GBC120A	1232	1157	239	224	335	359	45.5	23.5
	EBC120A	1144	1069	222	206	309	332	45.7	23.6
12.5	GBC150A	—	—	—	—	—	—	—	—
	EBC150A	—	—	—	—	—	—	—	—

[a] Weights are approximate. Horizontal and downflow unit and corner weights may vary slightly.

Manufacturer drawing · page 4 · https://elibrary.tranetechnologies.com/public/commercial-hvac/Literature/Installation/RT-SVN037A-EN_0528

TOP VIEW · LOOKING DOWN ON THE CURB · TO SCALE

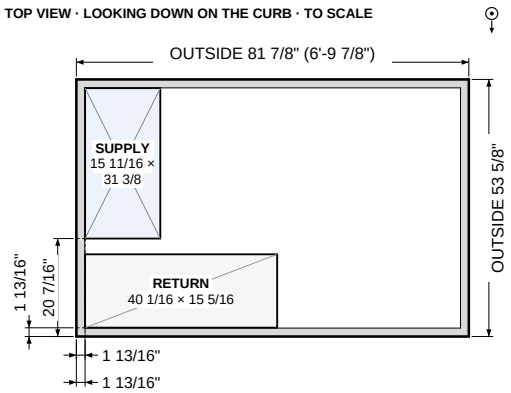

Grey band = curb rail, 1 3/4" wide. Inner line = INSIDE of rail: 78 3/8 × 50 1/8" (outside minus 2 × rail, calculated).
Offsets: from the OUTSIDE left end and the OUTSIDE bottom side of the curb to the opening's near edge. Openings are clear inside sizes.
Measure here: OUTSIDE of the curb rail with a tape; unit end not documented.

Trane/American Standard VERIFIED
Part # BAYCURB310*
OUTSIDE 81 7/8 × 53 5/8" · Height 14 in · 7.5-12.5 T
Also OUTSIDE (GDK/EDK 2026 catalog) 84 13/16 × 54 9/16"
Ref: x from outside of base at the supply/return end, y from outside of base on the return side; derived: base step 0.0625 + 1.75 rail (rail from (53.500-15.313-3.313-31.375)/2 and 15.688+3.000+21.375=40.063); sup_y = 1.8125+15.313+3.313

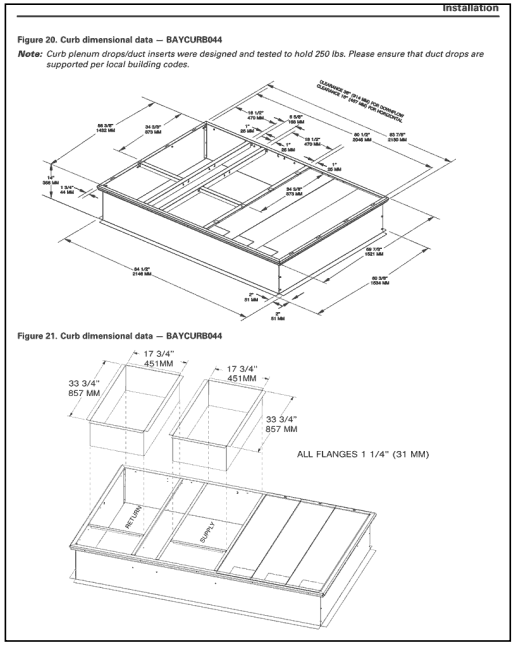

Installation

Figure 20. Curb dimensional data — BAYCURB044

Note: Curb plenum drops/duct inserts were designed and tested to hold 250 lbs. Please ensure that duct drops are supported per local building codes.

Figure 21. Curb dimensional data — BAYCURB044

Manufacturer drawing · page 13 · https://elibrary.tranetechnologies.com/public/trane-history/Literature/Installation/ACC-SVN43N-EN_042420

TOP VIEW · LOOKING DOWN ON THE CURB · TO SCALE

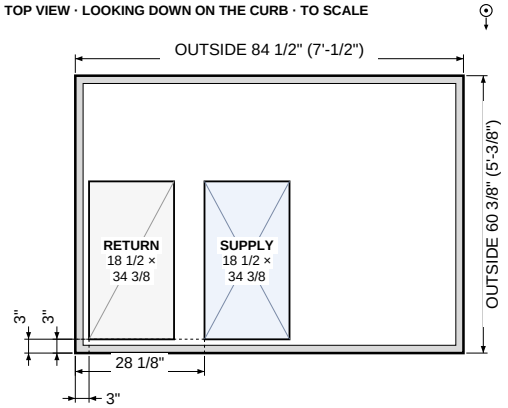

Grey band = curb rail, 1 11/16" wide. Inner line = INSIDE of rail: 81 1/8 × 57" (outside minus 2 × rail, calculated).
Offsets: from the OUTSIDE left end and the OUTSIDE bottom side of the curb to the opening's near edge. Openings are clear inside sizes.
Measure here: OUTSIDE of the curb rail with a tape; unit end not documented.

Trane/American Standard VERIFIED
Part # BAYCURB044A / BAYCURB044*
OUTSIDE 84 1/2 × 60 3/8" · Height 14 in · Tons 7.5-10 (high eff.)
Also OUTSIDE (2nd outline on drawing) 83 7/8 × 59 7/8"
Ref: offsets from BASE outline (84-1/2 x 60-3/8; inside faces 2.0 in): x = 2.0 + 1 + 18-1/2 + 6-5/8 (derived); y = 2.0 + printed 1 in side offset (openings toward one side; 56-3/8 inside width leaves ~21 in beside them); rail_in top rail derived

SOURCE EXCERPT (left: the cited page of the manufacturer or curb-maker document) beside our TOP VIEW drawing (right, to scale, looking down).
Openings are drawn only where their offsets are documented; offsets run from the OUTSIDE left end and OUTSIDE bottom side. Curb-maker sources are UNVERIFIED.

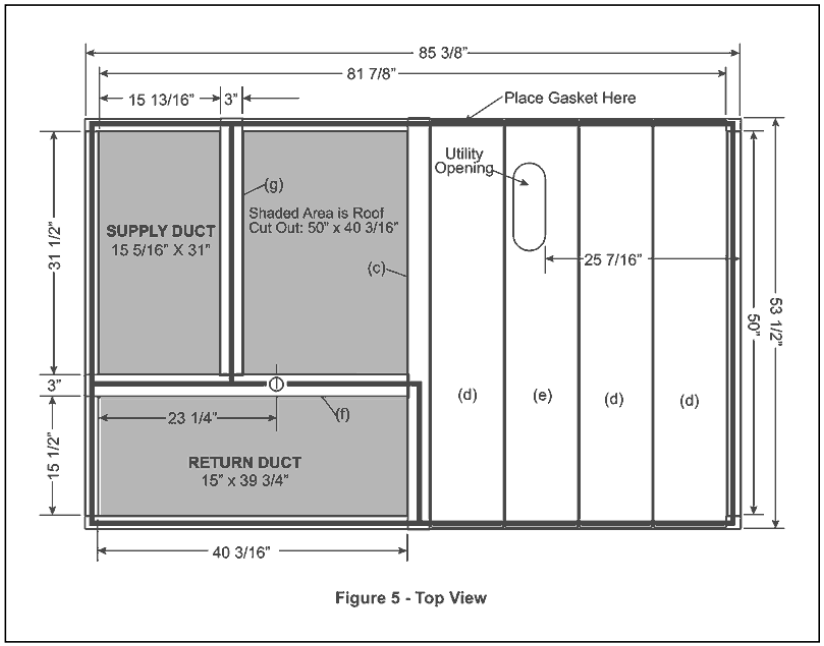

Figure 5 - Top View

Manufacturer drawing · page 3 · https://resource.bakerdist.com/is/content/Watscocom/Gemaire/rheem_rxkg-ddd14_article_5589365565245:

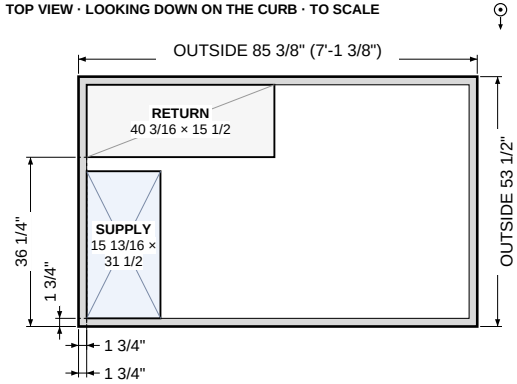

Grey band = curb rail, 1 3/4" wide. Inner line = INSIDE of rail: 81 7/8 × 50" (outside minus 2 × rail, calculated).
Offsets: from the OUTSIDE left end and the OUTSIDE bottom side of the curb to the opening's near edge. Openings are clear inside sizes.
Measure here: OUTSIDE of the curb rail with a tape; unit end not documented.

Rheem/Ruud VERIFIED
Part # RXKG-DDD14 / RXKG-DDD24 (also RXKG-DD14/DD24; welded RXKG-SD14/SD24)
OUTSIDE 85 3/8 × 53 1/2" · Height 14 / 24 in · 7.5-12.5 T
Ref: x from the duct end (outside), y from the long side the supply sits on (outside); sizes are the clear openings between supports (printed duct sizes 15-5/16x31 supply, 15x39-3/4 return); ret_y derived 1.75+31.5+3 = 36.25, closes to 53.5 with 15.5+1.75

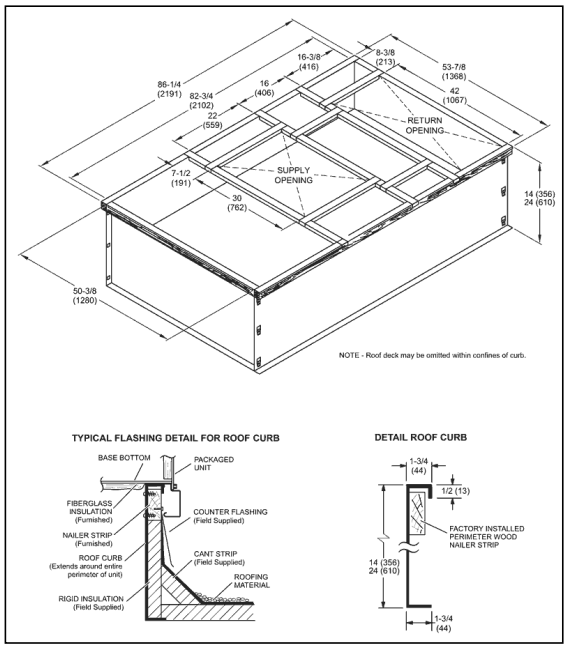

Manufacturer drawing · page 46 · https://www.lennox.com/dA/05afeb0294/ehb_sch_03to20_a2l_2409.pdf

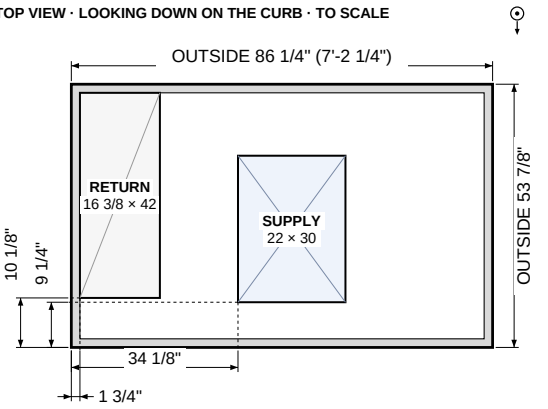

Grey band = curb rail, 1 3/4" wide. Inner line = INSIDE of rail: 82 3/4 × 50 3/8" (outside minus 2 × rail, calculated).
Offsets: from the OUTSIDE left end and the OUTSIDE bottom side of the curb to the opening's near edge. Openings are clear inside sizes.
Measure here: OUTSIDE of the curb rail with a tape; unit end not documented.

Lennox VERIFIED
Part # 11F72 (14 in) / 11F73 (24 in) hybrid downflow
OUTSIDE 86 1/4 × 53 7/8" · Height 14 / 24 in · 10 T
Ref: x from return end outside edge, y from the side the 8-3/8 / 7-1/2 offsets are dimensioned from; derived (rail 1.75 + printed offsets; 8-3/8+42 = 50-3/8 inner width closes); sup_x = 1.75+16.375+16

SOURCE EXCERPT (left: the cited page of the manufacturer or curb-maker document) beside our TOP VIEW drawing (right, to scale, looking down).
Openings are drawn only where their offsets are documented; offsets run from the OUTSIDE left end and OUTSIDE bottom side. Curb-maker sources are UNVERIFIED.

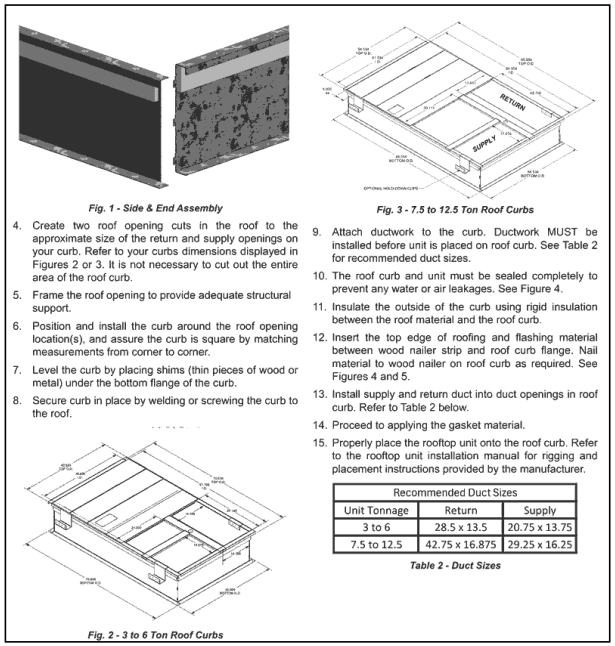

Fig. 1 - Side & End Assembly

Fig. 3 - 7.5 to 12.5 Ton Roof Curbs

4. Create two roof opening cuts in the roof to the approximate size of the return and supply openings on your curb. Refer to your curbs dimensions displayed in Figures 2 or 3. It is not necessary to cut out the entire area of the roof curb.
5. Frame the roof opening to provide adequate structural support.
6. Position and install the curb around the roof opening location(s), and assure the curb is square by matching measurements from corner to corner.
7. Level the curb by placing shims (thin pieces of wood or metal) under the bottom flange of the curb.
8. Secure curb in place by welding or screwing the curb to the roof.
9. Attach ductwork to the curb. Ductwork MUST be installed before unit is placed on roof curb. See Table 2 for recommended duct sizes.
10. The roof curb and unit must be sealed completely to prevent any water or air leakages. See Figure 4.
11. Insulate the outside of the curb using rigid insulation between the roof material and the roof curb.
12. Insert the top edge of roofing and flashing material between wood nailer strip and roof curb flange. Nail material to wood nailer on roof curb as required. See Figures 4 and 5.
13. Install supply and return duct into duct openings in roof curb. Refer to Table 2 below.
14. Proceed to applying the gasket material.
15. Properly place the rooftop unit onto the roof curb. Refer to the rooftop unit installation manual for rigging and placement instructions provided by the manufacturer.

Recommended Duct Sizes		
Unit Tonnage	Return	Supply
3 to 6	28.5 x 13.5	20.75 x 13.75
7.5 to 12.5	42.75 x 16.875	29.25 x 16.25

Table 2 - Duct Sizes

Fig. 2 - 3 to 6 Ton Roof Curbs

Manufacturer drawing · page 2 · https://cdn.daikincloud.io/PIM/Assets/Documents/IM-IOD-7122B.pdf

TOP VIEW · LOOKING DOWN ON THE CURB · TO SCALE

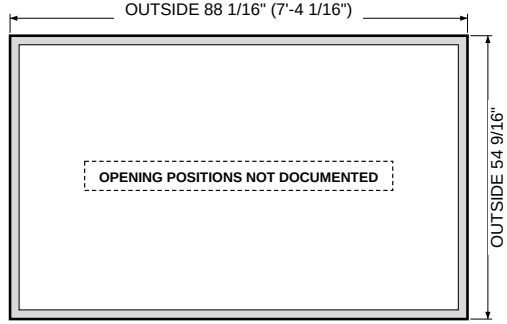

Grey band = curb rail, 1 3/4" wide. Inner line = INSIDE of rail: 84 9/16 × 51 1/16" (outside minus 2 × rail, calculated).
Supply opening 17 1/4 × 30 1/8": size documented, position not documented (not drawn).
Return opening 17 5/8 × 43 3/4": size documented, position not documented (not drawn).
Measure here: OUTSIDE of the curb rail with a tape; unit end not documented.

Daikin/Goodman/Amana VERIFIED
Part # 0270L02690MC (14 in) / 0270L02691MC (24 in) (Micro Metl 0270L01153 / 0270L01154) = IOD-7122 7.5-12.5T curb
OUTSIDE 88 1/16 × 54 9/16" · Height 14, 24 (seismic/hurricane 0270L02693MC) in · 7.5-12.5 T
Ref: sizes from IOD-7122B Fig.3; rail 1.75 derived = (88.054-84.554)/2; offsets not dimensioned

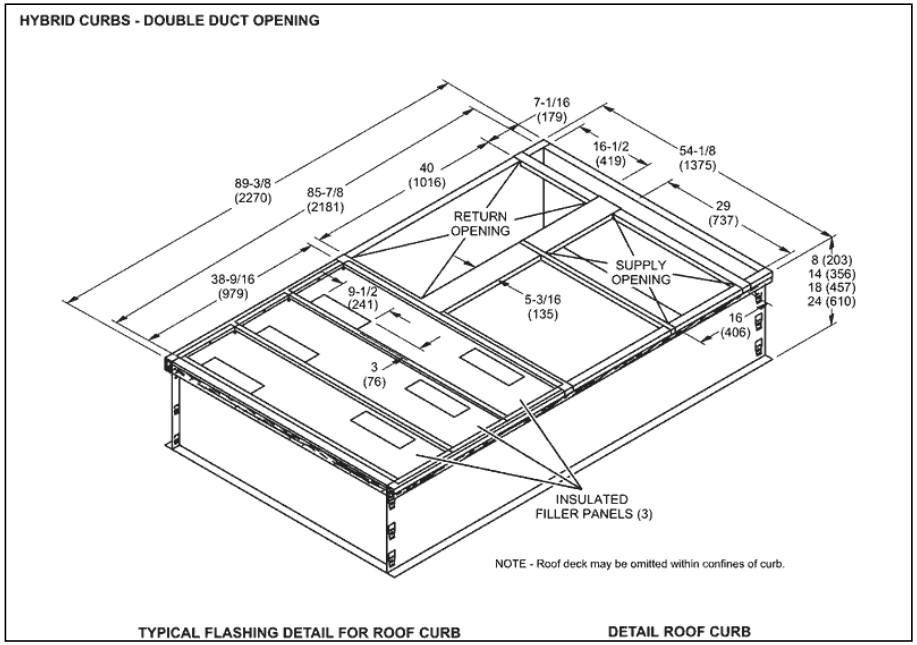

Manufacturer drawing · page 36 · https://tech.lennoxintl.com/C03e7o14l/VIu12Ch2uV/ehb_zgb_zga_bbox_2103.pdf

TOP VIEW · LOOKING DOWN ON THE CURB · TO SCALE

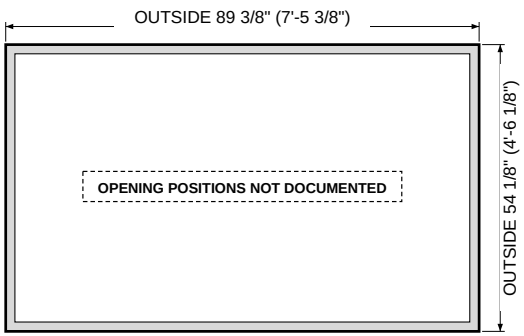

Grey band = curb rail, 1 3/4" wide. Inner line = INSIDE of rail: 85 7/8 × 50 5/8" (outside minus 2 × rail, calculated).
Supply opening 16 × 29": size documented, position not documented (not drawn).
Return opening 40 × 16 1/2": size documented, position not documented (not drawn).
Measure here: OUTSIDE of the curb rail with a tape; unit end not documented.

Lennox VERIFIED
Part # 10Z25 (8 in) / 10Z26 (14 in) / 10Z27 (18 in) / 10Z28 (24 in) hybrid downflow (Z1CURB40B-1 model number is not printed in either cited source)
OUTSIDE 89 3/8 × 54 1/8" · Height 8 / 14 / 18 / 24 in · 7.5-12.5 T
Ref: ret_x = printed 7-1/16 from the outside end edge (isometric); supply position and y offsets not dimensioned

SOURCE EXCERPT (left: the cited page of the manufacturer or curb-maker document) beside our TOP VIEW drawing (right, to scale, looking down).
Openings are drawn only where their offsets are documented; offsets run from the OUTSIDE left end and OUTSIDE bottom side. Curb-maker sources are UNVERIFIED.

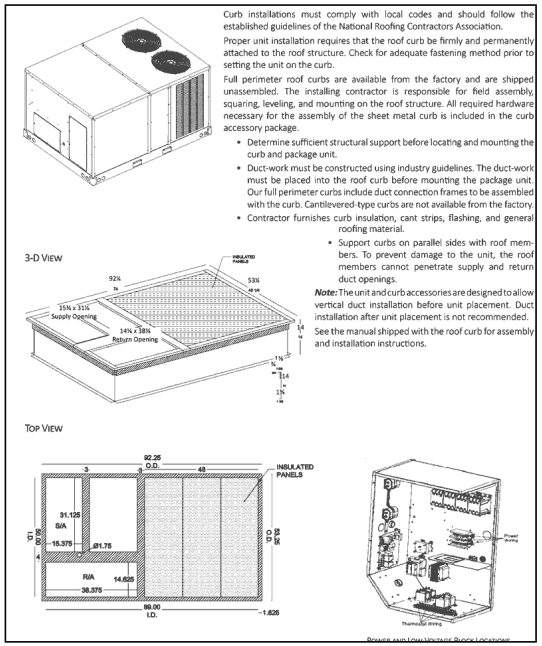

Curb installations must comply with local codes and should follow the established guidelines of the National Roofing Contractors Association.

Proper unit installation requires that the roof curb be firmly and permanently attached to the roof structure. Check for adequate fastening method prior to setting the unit on the curb.

Full perimeter roof curbs are available from the factory and are shipped unassembled. The installing contractor is responsible for field assembly, squaring, leveling, and mounting on the roof structure. All required hardware necessary for the assembly of the sheet metal curb is included in the curb accessory package.

- Determine sufficient structural support before locating and mounting the curb and package unit.
- Duct-work must be constructed using industry guidelines. The duct-work must be placed into the roof curb before mounting the package unit. Our full perimeter curbs include duct connection frames to be assembled with the curb. Cantilevered-type curbs are not available from the factory.
- Contractor furnishes curb insulation, cant strips, flashing, and general roofing material.
- Support curbs on parallel sides with roof members. To prevent damage to the unit, the roof members cannot penetrate supply and return duct openings.

Note: The unit and curb accessories are designed to allow vertical duct installation before unit placement. Duct installation after unit placement is not recommended.

See the manual shipped with the roof curb for assembly and installation instructions.

3-D View

Top View

Manufacturer drawing · page 33 · https://resource.ecmdi.com/is/content/Watscocom/Gemaire/daikin_dcc120xxx4bxxx_article_14108904087

TOP VIEW · LOOKING DOWN ON THE CURB · TO SCALE

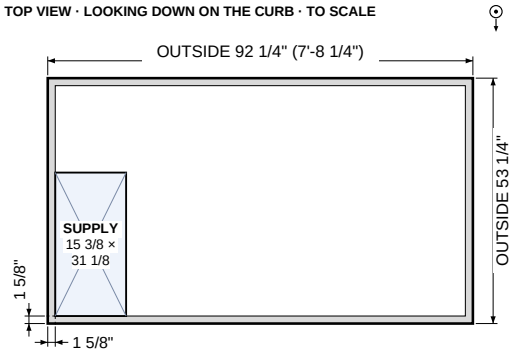

Grey band = curb rail, 1 5/8" wide. Inner line = INSIDE of rail: 89 × 50" (outside minus 2 × rail, calculated).

Offsets: from the OUTSIDE left end and the OUTSIDE bottom side of the curb to the opening's near edge. Openings are clear inside sizes.

Return opening 38 3/8 × 14 5/8": size documented, position not documented (not drawn).

Measure here: OUTSIDE of the curb rail with a tape; unit end not documented.

Daikin/Goodman/Amana VERIFIED
Part # 14CURB90150 (14 in) - Daikin DCC/DCG & Goodman CPC/CPG 090-150 full-perimeter curb
OUTSIDE 92 1/4 × 53 1/4" · Height 14 in · 7.5-12.5 T
Ref: x from the supply/return end outside edge (left in SS-DCC7 Top View), y from the side the supply touches (top); return sits at the opposite (bottom) side but its y offset does not close (31.125+4+14.625 = 49.75 vs 50.00 I.D.), so ret_y left out

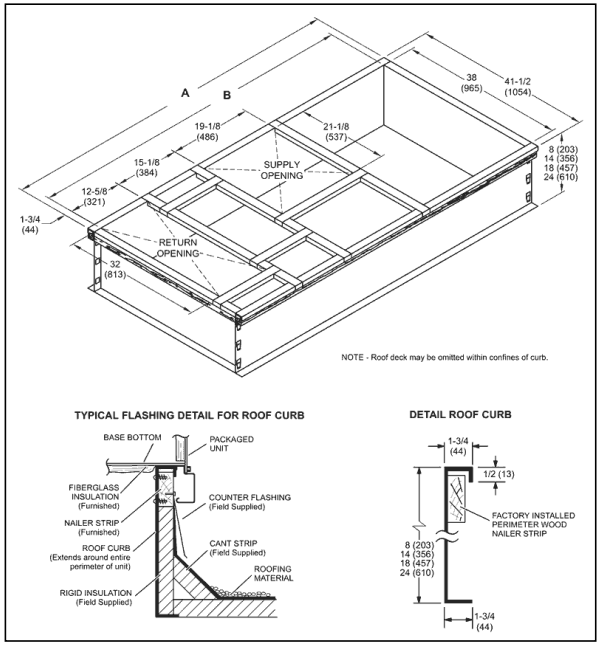

Manufacturer drawing · page 38 · https://lockeproductionblob.blob.core.windows.net/storage/products/attachments/2020/01/15/a8c6ed3

TOP VIEW · LOOKING DOWN ON THE CURB · TO SCALE

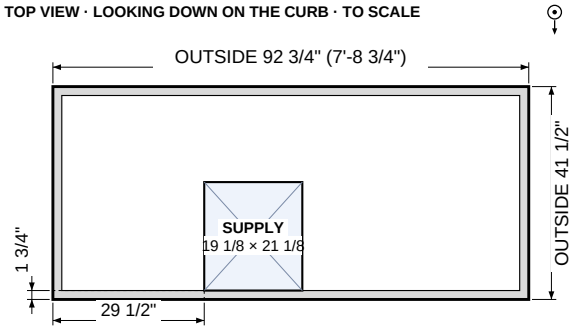

Grey band = curb rail, 1 3/4" wide. Inner line = INSIDE of rail: 89 1/4 × 38" (outside minus 2 × rail, calculated).

Offsets: from the OUTSIDE left end and the OUTSIDE bottom side of the curb to the opening's near edge. Openings are clear inside sizes.

Return opening 15 1/8 × 32": size documented, position not documented (not drawn).

Measure here: OUTSIDE of the curb rail with a tape; unit end not documented.

Lennox VERIFIED
Part # K1CURB70AP1 / 71AP1 / 72AP1 / 73AP1 (full perimeter, 8/14/18/24)
OUTSIDE 92 3/4 × 41 1/2" · Height 8, 14, 18, 24 in · 7.5 T
Ref: same opening layout as the standard A-box curb on the one KGA p38 drawing; the extra 13 in of the 92-3/4 full-perimeter curb is at the condenser end (footnote), so offsets from the return end are unchanged (derived)

SOURCE EXCERPT (left: the cited page of the manufacturer or curb-maker document) beside our TOP VIEW drawing (right, to scale, looking down).
Openings are drawn only where their offsets are documented; offsets run from the OUTSIDE left end and OUTSIDE bottom side. Curb-maker sources are UNVERIFIED.

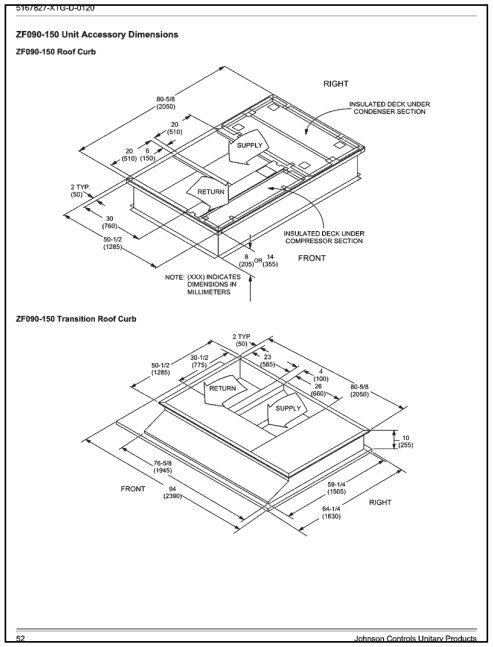

Manufacturer drawing · page 52 · https://pompano.yorknow.com/pub/media/documentation/yorksunprostandardzfrooftopstechguide.pdf

TOP VIEW · LOOKING DOWN ON THE CURB · TO SCALE

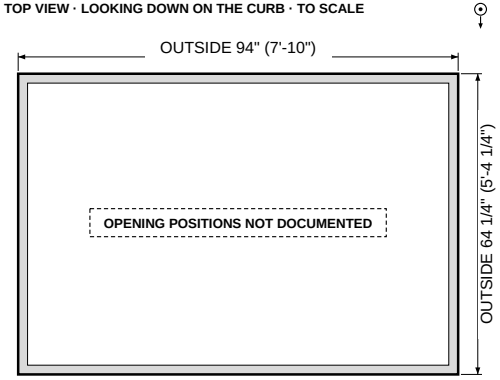

Grey band = curb rail, 2" wide. Inner line = INSIDE of rail: 90 × 60 1/4" (outside minus 2 × rail, calculated).
Supply opening 26 × 30 1/2": size documented, position not documented (not drawn).
Return opening 23 × 30 1/2": size documented, position not documented (not drawn).
Measure here: OUTSIDE of the curb rail with a tape; unit end not documented.

York/JCI — VERIFIED
Part # 1RC0472 (transition curb Sunline to Predator)
OUTSIDE 94 × 64 1/4" · Height 10 (single-piece adapter) in · 7.5-12.5 T
Ref: TOP frame (80-5/8 x 50-1/2) of the transition curb; return 23 / 4 divider / supply 26 along the length, 30-1/2 across; offsets to the top-frame edges not printed, omitted.

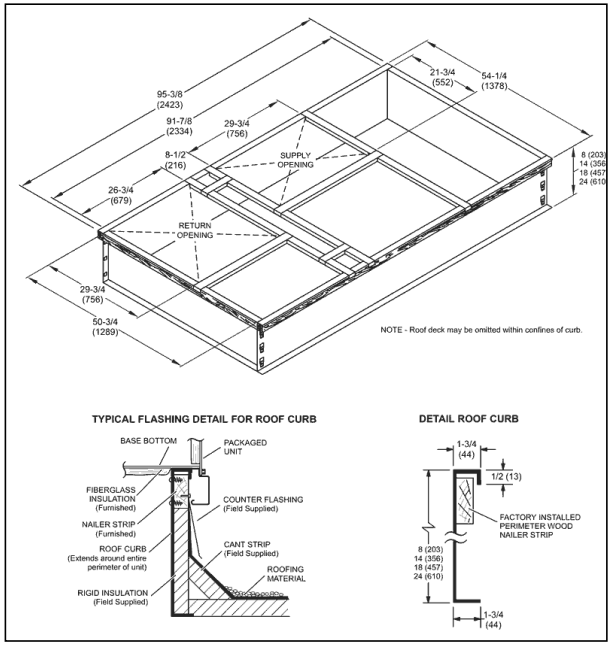

Manufacturer drawing · page 44 · https://lockeproductionblob.blob.core.windows.net/storage/products/attachments/2019/03/04/e26df143

TOP VIEW · LOOKING DOWN ON THE CURB · TO SCALE

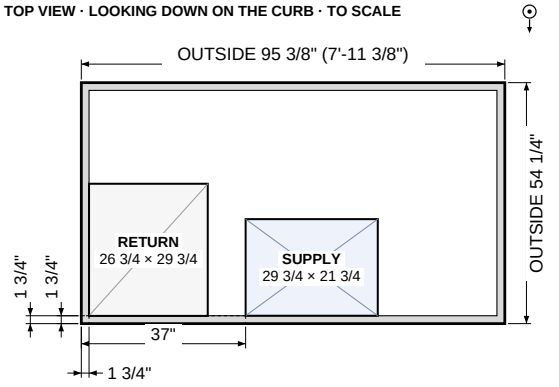

Grey band = curb rail, 1 3/4" wide. Inner line = INSIDE of rail: 91 7/8 × 50 3/4" (outside minus 2 × rail, calculated).
Offsets: from the OUTSIDE left end and the OUTSIDE bottom side of the curb to the opening's near edge. Openings are clear inside sizes.
Measure here: OUTSIDE of the curb rail with a tape; unit end not documented.

Lennox — VERIFIED
Part # C1CURB70B-1 (8) 11F54 / C1CURB71B-1 (14) 11F55 / C1CURB72B-1 (18) 11F56 / C1CURB73B-1 (24) 11F57
OUTSIDE 95 3/8 × 54 1/4" · Height 8,14,18,24 in · 7.5-12.5 T
Ref: x from return end: return at inside of end rail, 8-1/2 gap, supply (sup_x derived 1-3/4+26-3/4+8-1/2); y from the long side both openings sit against (derived = rail)

SOURCE EXCERPT (left: the cited page of the manufacturer or curb-maker document) beside our TOP VIEW drawing (right, to scale, looking down).
Openings are drawn only where their offsets are documented; offsets run from the OUTSIDE left end and OUTSIDE bottom side. Curb-maker sources are UNVERIFIED.

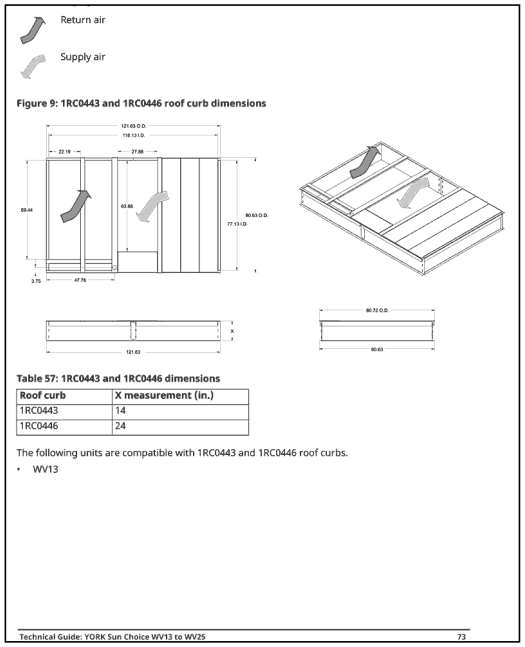

Return air

Supply air

Figure 9: 1RC0443 and 1RC0446 roof curb dimensions

Table 57: 1RC0443 and 1RC0446 dimensions

Roof curb	X measurement (in.)
1RC0443	14
1RC0446	24

The following units are compatible with 1RC0443 and 1RC0446 roof curbs.

- WV13

Technical Guide: YORK Sun Choice WV13 to WV25 73

Manufacturer drawing · page 73 · https://files.hvacnavigator.com/p/6434416-ytg-b-1224.pdf

TOP VIEW · LOOKING DOWN ON THE CURB · TO SCALE

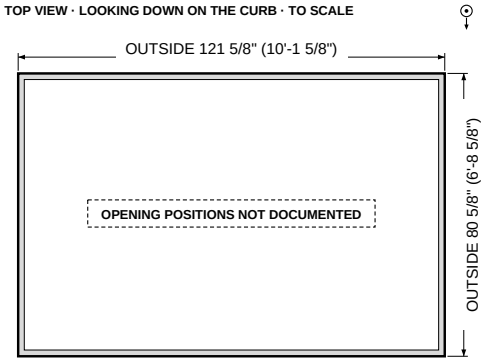

Grey band = curb rail, 1 3/4" wide. Inner line = INSIDE of rail: 118 1/8 × 77 1/8" (outside minus 2 × rail, calculated).

Supply opening 27 7/8 × 63 7/8": size documented, position not documented (not drawn).

Measure here: OUTSIDE of the curb rail with a tape; unit end not documented.

York/JCI — VERIFIED

Part # 1RC0443 (14 in) / 1RC0446 (24 in)

OUTSIDE 121 5/8 × 80 5/8" · Height 14 / 24 in · 12.5-17.5 T

Also OUTSIDE (ProVent CBKDSAV1518 replacement curb O.D. (unverified)) 121 1/8 × 80 1/8"

Ref: x from the return/blower outside end, y from the BACK outside side (inside rail 1.75 = (O.D.-I.D.)/2). Return section runs from the end rail to a divider centered 47.78 from the outside end (printed); it is split by a center duct support, first bay 22.19 printed; total return length about 44 is SCALED, not printed, so ret_len is omitted. sup_x not printed (starts right after that divider), omitted.

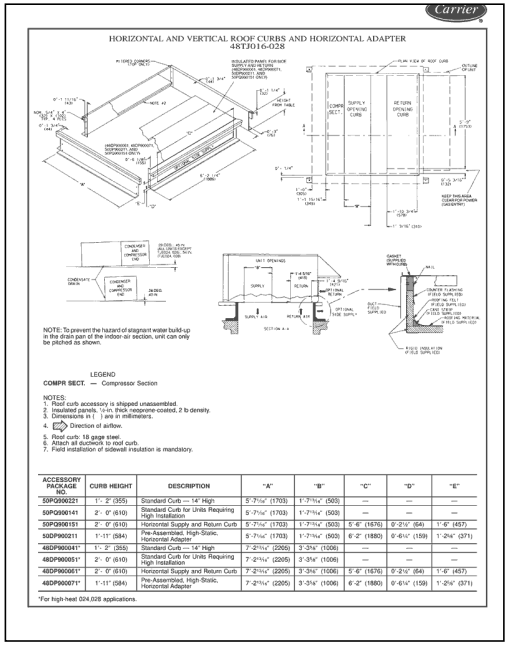

Carrier

HORIZONTAL AND VERTICAL ROOF CURBS AND HORIZONTAL ADAPTER
48TJ016-028

NOTE: To prevent the hazard of stagnant water build-up in the drain pan of the indoor-air section, unit can only be pitched as shown.

LEGEND
COMPR SECT. — Compressor Section

NOTES:
1. Roof curb accessory is shipped unassembled.
2. Insulated panels, ½-in. thick neoprene coated, 2 lb density.
3. Dimensions in ( ) are in millimeters.
4. Direction of airflow.
5. Roof curb: 18 gage steel.
6. Attach all ductwork to roof curb.
7. Field installation of sidewall insulation is mandatory.

ACCESSORY PACKAGE NO.	CURB HEIGHT	DESCRIPTION	"A"	"B"	"C"	"D"	"E"
50PQ900221	1'- 2" (355)	Standard Curb — 14" High	5'-7 15/16" (1703)	1'-7 15/16" (503)	—	—	—
50PQ900141	2 - 0" (610)	Standard Curb for Units Requiring High Installation	5'-7 15/16" (1703)	1'-7 15/16" (503)	—	—	—
50PQ900151	2' - 0" (610)	Horizontal Supply and Return Curb	5'-7 15/16" (1703)	1'-7 15/16" (503)	5'-6" (1676)	0'-2 1/2" (64)	1'-6" (457)
50DP900211	1'-11" (584)	Pre-Assembled, High-Static, Horizontal Adapter	5'-7 15/16" (1703)	1'-7 15/16" (503)	6'-2" (1880)	0'-6 1/4" (159)	1'-2 9/16" (371)
48DP900041*	1'- 2" (355)	Standard Curb — 14" High	7'-2 11/16" (2205)	3'-3 9/16" (1006)	—	—	—
48DP900051*	2'- 0" (610)	Standard Curb for Units Requiring High Installation	7'-2 11/16" (2205)	3'-3 9/16" (1006)	—	—	—
48DP900061*	2'- 0" (610)	Horizontal Supply and Return Curb	7'-2 11/16" (2205)	3'-3 9/16" (1006)	5'-6" (1676)	0'-2 1/2" (64)	1'-6" (457)
48DP900071*	1'-11" (584)	Pre-Assembled, High-Static, Horizontal Adapter	7'-2 11/16" (2205)	3'-3 9/16" (1006)	6'-2" (1880)	0'-6 1/4" (159)	1'-2 9/16" (371)

*For high-heat 024,028 applications.

Manufacturer drawing · page 23 · https://wizard.youngsupply.com/files/5-9530.pdf

TOP VIEW · LOOKING DOWN ON THE CURB · TO SCALE

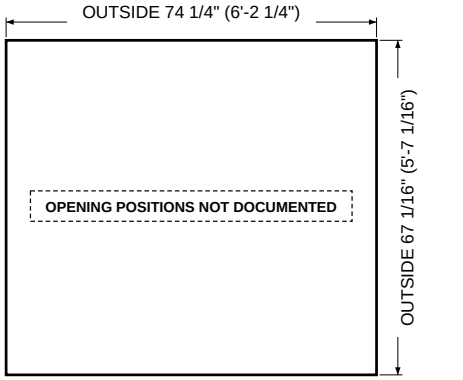

Rail width not documented, so the inside line is not drawn.

Opening sizes are in the list; their positions are not documented, so none are drawn.

Measure here: OUTSIDE of the curb rail with a tape; unit end not documented.

Carrier/Bryant/ICP — VERIFIED

Part # 50PQ900221 (14 in) / 50PQ900141 (24 in); later numbers CRRFCURB010A00 (14) / CRRFCURB011A00 (24)

OUTSIDE 74 1/4 × 67 1/16" · Height 14 / 24 in · Tons 15-25 T · legacy

Also OUTSIDE (ProVent existing O.D.) 77 3/4 × 70 9/16"

SOURCE EXCERPT (left: the cited page of the manufacturer or curb-maker document) beside our TOP VIEW drawing (right, to scale, looking down).
Openings are drawn only where their offsets are documented; offsets run from the OUTSIDE left end and OUTSIDE bottom side. Curb-maker sources are UNVERIFIED.

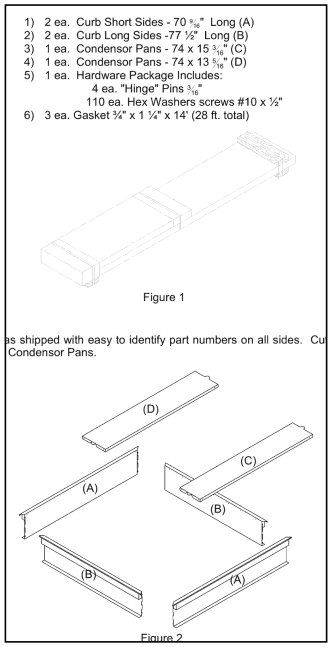

1) 2 ea. Curb Short Sides - 70 9/16" Long (A)
2) 2 ea. Curb Long Sides -77 1/2" Long (B)
3) 1 ea. Condensor Pans - 74 x 15 3/16" (C)
4) 1 ea. Condensor Pans - 74 x 13 5/16" (D)
5) 1 ea. Hardware Package Includes:
4 ea. "Hinge" Pins 3/16"
110 ea. Hex Washers screws #10 x ½"
6) 3 ea. Gasket ¾" x 1 ¼" x 14' (28 ft. total)

Figure 1

as shipped with easy to identify part numbers on all sides. Cu
Condensor Pans.

(D)
(C)
(A)
(B)
(B)
(A)

Figure 2

Manufacturer drawing · page 1 · https://files.rheem.com/LiteratureArchive/a643b.pdf

TOP VIEW · LOOKING DOWN ON THE CURB · TO SCALE

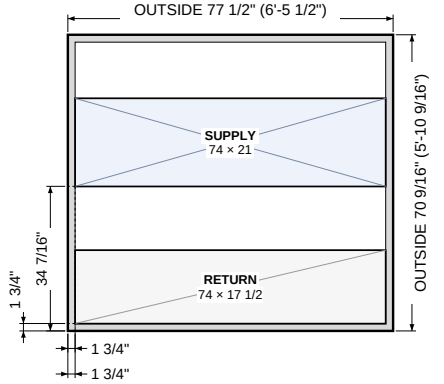

Grey band = curb rail, 1 3/4" wide. Inner line = INSIDE of rail: 74 × 67 1/16" (outside minus 2 × rail, calculated).
Offsets: from the OUTSIDE left end and the OUTSIDE bottom side of the curb to the opening's near edge. Openings are clear inside sizes.
Measure here: OUTSIDE of the curb rail with a tape; unit end not documented.

Nordyne VERIFIED
Part # 555617 / 555618 / 555619 / 555620
OUTSIDE 77 1/2 × 70 9/16" · Height 8 / 14 / 18 / 24 in · 12.5-15 T · legacy
Ref: openings span full 74 inside length; x from outside of an end rail; y from outside of the long side next to the return; derived = 1.75 rail + 17.5 return + 15-3/16 pan (chain 17-1/2/15-3/16/21/13-5/16 closes to 67-1/16 inside)

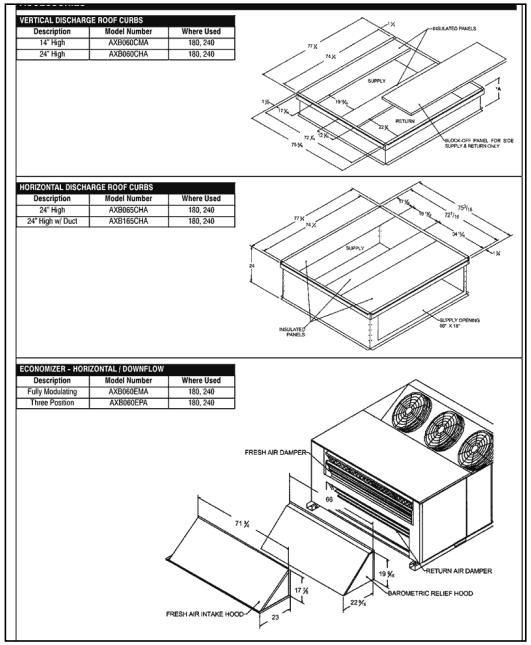

VERTICAL DISCHARGE ROOF CURBS

Description	Model Number	Where Used
14" High	AXB060CMA	180, 240
24" High	AXB060CHA	180, 240

HORIZONTAL DISCHARGE ROOF CURBS

Description	Model Number	Where Used
24" High	AXB065CHA	180, 240
24" High w/ Duct	AXB165CHA	180, 240

ECONOMIZER – HORIZONTAL / DOWNFLOW

Description	Model Number	Where Used
Fully Modulating	AXB060EMA	180, 240
Three Position	AXB060EPA	180, 240

FRESH AIR DAMPER
RETURN AIR DAMPER
BAROMETRIC RELIEF HOOD
FRESH AIR INTAKE HOOD

Manufacturer drawing · page 13 · http://icpindexing.toddsit.com/documents/086477/50941220104.pdf

TOP VIEW · LOOKING DOWN ON THE CURB · TO SCALE

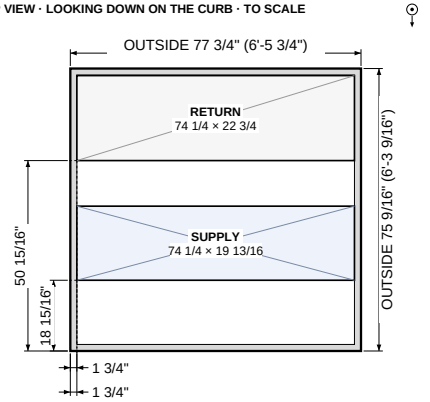

Grey band = curb rail, 1 3/4" wide. Inner line = INSIDE of rail: 74 1/4 × 72 1/16" (outside minus 2 × rail, calculated).
Offsets: from the OUTSIDE left end and the OUTSIDE bottom side of the curb to the opening's near edge. Openings are clear inside sizes.
Measure here: OUTSIDE of the curb rail with a tape; unit end not documented.

Carrier/Bryant/ICP VERIFIED
Part # AXB060CMA (14 in) / AXB060CHA (24 in); horizontal-discharge AXB065CHA / AXB165CHA (24 in)
OUTSIDE 77 3/4 × 75 9/16" · Height 14, 24 in · Tons 15-20 T · legacy
Ref: openings are bands spanning the full 74-1/4 inside of the 77-3/4 (length) axis and stacked along the 75-9/16 (width) axis; y from the outside of the side where the 17-3/16 panel starts; sup_y/ret_y derived 1.75+17.1875 and +19.8125+12.1875; stack closes to 72-1/16 inside within 1/8

SOURCE EXCERPT (left: the cited page of the manufacturer or curb-maker document) beside our TOP VIEW drawing (right, to scale, looking down).
Openings are drawn only where their offsets are documented; offsets run from the OUTSIDE left end and OUTSIDE bottom side. Curb-maker sources are UNVERIFIED.

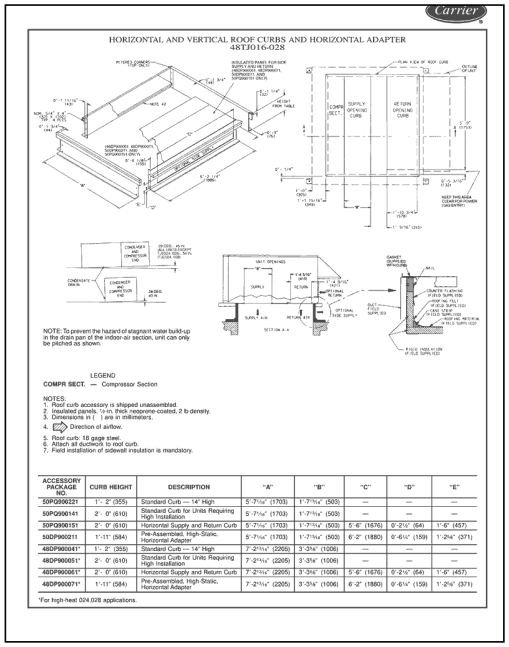

HORIZONTAL AND VERTICAL ROOF CURBS AND HORIZONTAL ADAPTER
48TJ016-028

NOTE: To prevent the hazard of stagnant water build-up in the drain pan of the indoor-air section, unit can only be pitched as shown.

LEGEND
COMPR SECT. — Compressor Section

NOTES:
1. Roof curb accessory is shipped unassembled.
2. Insulated panels, 1 in. thick neoprene-coated, 2 lb density.
3. Dimensions in ( ) are in millimeters.
4. Direction of airflow.
5. Roof curb: 18 gage steel.
6. Attach all ductwork to roof curb.
7. Field installation of sidewall insulation is mandatory.

ACCESSORY PACKAGE NO.	CURB HEIGHT	DESCRIPTION	"A"	"B"	"C"	"D"	"E"
50PQ900221	1'- 2" (355)	Standard Curb — 14" High	5'-7 1/16" (1703)	1'-7 11/16" (503)	—	—	—
50PQ900141	2'- 0" (610)	Standard Curb for Units Requiring High Installation	5'-7 1/16" (1703)	1'-7 11/16" (503)	—	—	—
50PQ900151	2'- 0" (610)	Horizontal Supply and Return Curb	5'-7 1/16" (1703)	1'-7 11/16" (503)	5'-6" (1676)	0'-2 1/2" (64)	1'-6" (457)
50DP900211	1'-11" (584)	Pre-Assembled, High-Static, Horizontal Adapter	5'-7 1/16" (1703)	1'-7 11/16" (503)	6'-2" (1880)	0'-6 1/4" (159)	1'-2 1/4" (371)
48DP900041*	1'- 2" (355)	Standard Curb — 14" High	7'-2 11/16" (2205)	3'-3 7/8" (1006)	—	—	—
48DP900051*	2'- 0" (610)	Standard Curb for Units Requiring High Installation	7'-2 11/16" (2205)	3'-3 7/8" (1006)	—	—	—
48DP900061*	2'- 0" (610)	Horizontal Supply and Return Curb	7'-2 11/16" (2205)	3'-3 7/8" (1006)	5'-6" (1676)	0'-2 1/2" (64)	1'-6" (457)
48DP900071*	1'-11" (584)	Pre-Assembled, High-Static, Horizontal Adapter	7'-2 11/16" (2205)	3'-3 7/8" (1006)	6'-2" (1880)	0'-6 1/4" (159)	1'-2 1/4" (371)

*For high-heat 024,028 applications.

Manufacturer drawing · page 23 · https://wizard.youngsupply.com/files/5-9530.pdf

No source excerpt on file for this curb

TOP VIEW · LOOKING DOWN ON THE CURB · TO SCALE

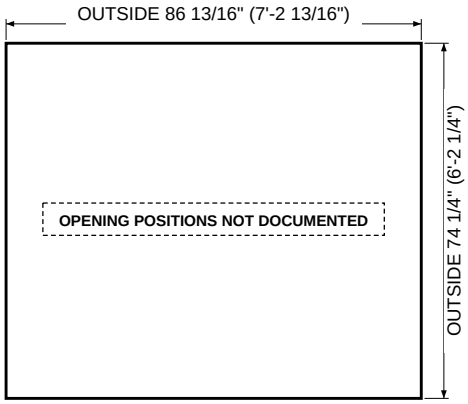

Rail width not documented, so the inside line is not drawn.
Opening sizes are in the list; their positions are not documented, so none are drawn.
Measure here: OUTSIDE of the curb rail with a tape; unit end not documented.

Carrier/Bryant/ICP — VERIFIED
Part # 48DP900041 (14 in) / 48DP900051 (24 in)
OUTSIDE 86 13/16 × 74 1/4" · Height 14 / 24 in · Tons 20-25 T (high heat) · legacy

TOP VIEW · LOOKING DOWN ON THE CURB · TO SCALE

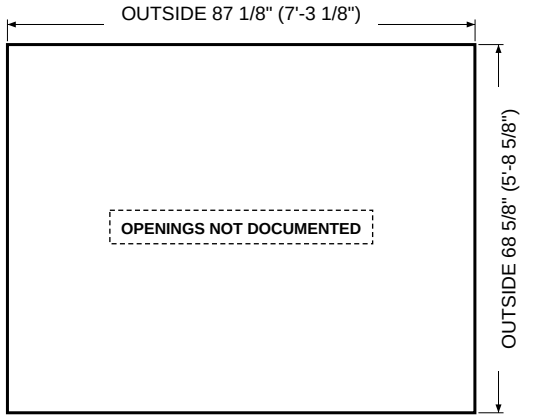

Rail width not documented, so the inside line is not drawn.
Measure here: OUTSIDE of the curb rail with a tape; unit end not documented.

Carrier/Bryant/ICP — FIELD-MEASURED
Part # 48DD016 curb (factory part # not on file)
OUTSIDE 87 1/8 × 68 5/8" · 15 T · legacy
Note: Outside size field-measured with a tape on an existing curb. Openings not on file.

SOURCE EXCERPT (left: the cited page of the manufacturer or curb-maker document) beside our TOP VIEW drawing (right, to scale, looking down).
Openings are drawn only where their offsets are documented; offsets run from the OUTSIDE left end and OUTSIDE bottom side. Curb-maker sources are UNVERIFIED.

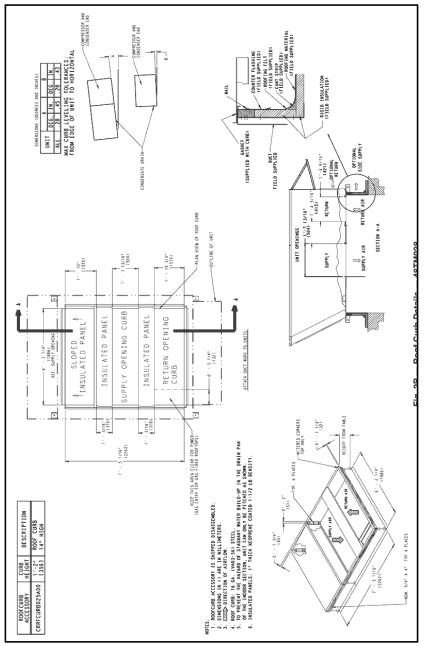

Manufacturer drawing · page 4 · https://www.shareddocs.com/hvac/docs/1005/Public/0E/48TM-4SI.pdf

TOP VIEW · LOOKING DOWN ON THE CURB · TO SCALE

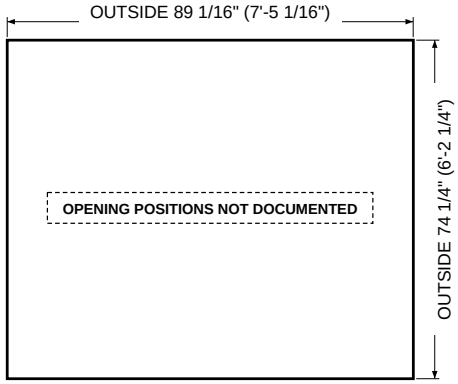

Rail width not documented, so the inside line is not drawn.
Opening sizes are in the list; their positions are not documented, so none are drawn.
Measure here: OUTSIDE of the curb rail with a tape; unit end not documented.

Carrier/Bryant/ICP — VERIFIED
Part # CRRFCURB025A00 (14 in)
OUTSIDE 89 1/16 × 74 1/4" · Height 14 in · Tons 25 T · legacy
Ref: bands run across the full curb width; supply opening curb 1'-7 13/16 and return opening curb 1'-10 3/4 along the length (plan); unit return opening itself 1'-4 5/16; widths across and x offsets not printed clearly enough to give

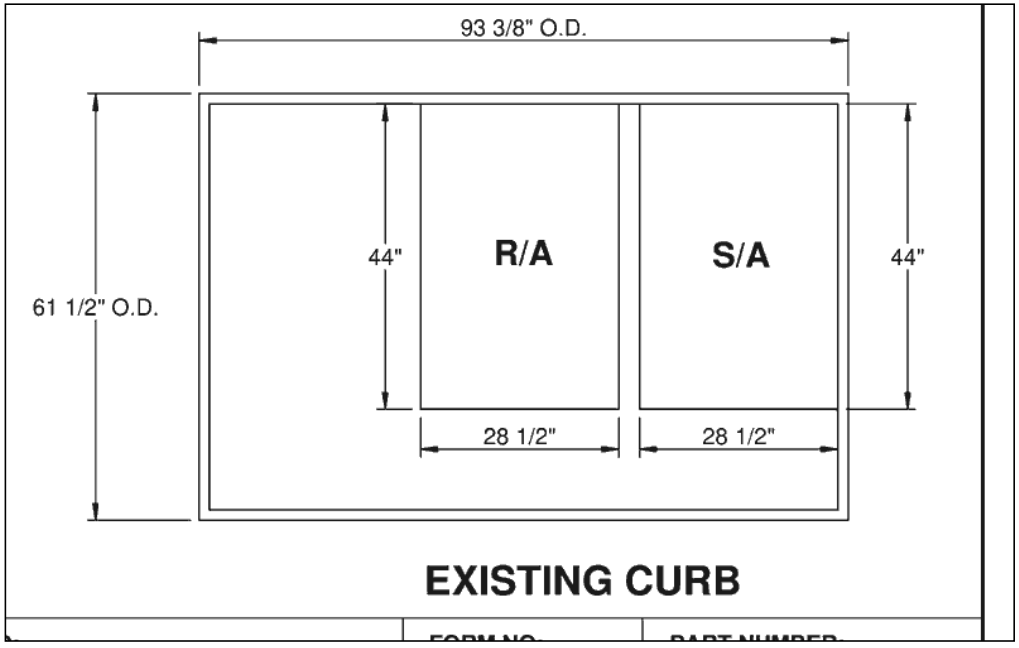

Curb-maker drawing (UNVERIFIED) · page 1 · https://www.proventusa.com/-/media/provent/catalog/pdf/york-curb-adapters/curb/pres

TOP VIEW · LOOKING DOWN ON THE CURB · TO SCALE

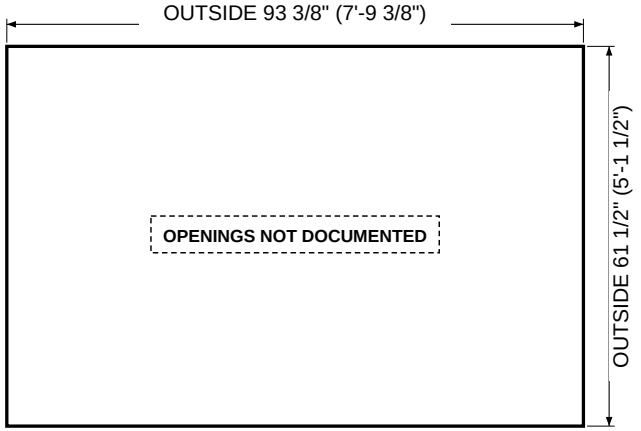

Rail width not documented, so the inside line is not drawn.
Measure here: OUTSIDE of the curb rail with a tape; unit end not documented.

Carrier/Bryant/ICP — UNVERIFIED
Part # (factory curb part unknown)
OUTSIDE 93 3/8 × 61 1/2" · Height 14 in · Tons 12.5-20 T · legacy

SOURCE EXCERPT (left: the cited page of the manufacturer or curb-maker document) beside our TOP VIEW drawing (right, to scale, looking down).
Openings are drawn only where their offsets are documented; offsets run from the OUTSIDE left end and OUTSIDE bottom side. Curb-maker sources are UNVERIFIED.

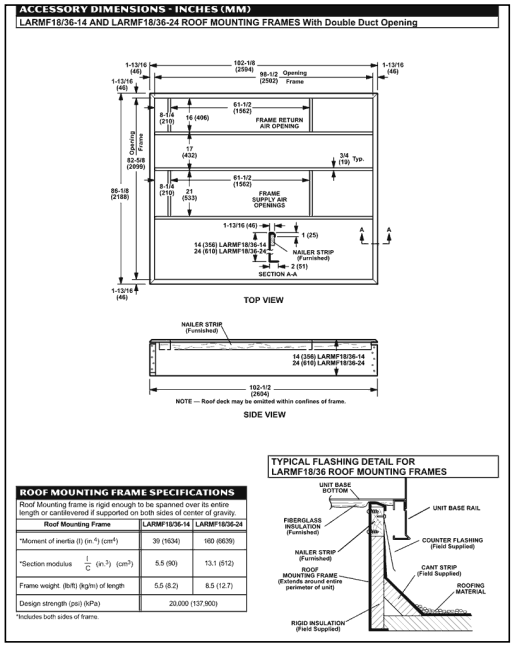

Manufacturer drawing · page 38 · https://tech.lennoxintl.com/c03e7o14l/viu12ch2uv/ehb_cbox_0299_newblwrdata.pdf

TOP VIEW · LOOKING DOWN ON THE CURB · TO SCALE

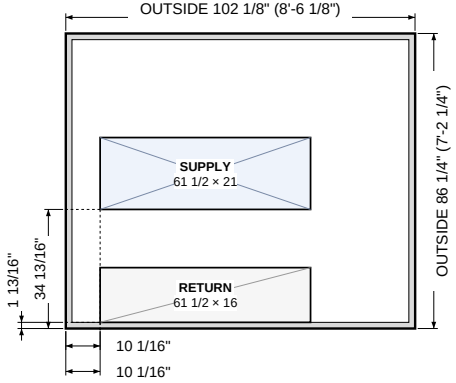

Grey band = curb rail, 1 13/16" wide. Inner line = INSIDE of rail: 98 1/2 × 82 5/8" (outside minus 2 × rail, calculated).
Offsets: from the OUTSIDE left end and the OUTSIDE bottom side of the curb to the opening's near edge. Openings are clear inside sizes.
Measure here: OUTSIDE of the curb rail with a tape; unit end not documented.

Lennox **VERIFIED**
Part # LARMF18/36-14 / LARMF18/36-24 (standard);
LARMF18/30S-14/-18/-24 (Cliplock 1000, same footprint)
OUTSIDE 102 1/8 × 86 1/4" · Height 8 (C1CURB40CD1 cliplock), 14, 18 (cliplock), 24 in · 13-25 T · legacy
Ref: x from the end: 8-1/4 inside the end rail (1-13/16+8-1/4, derived); y from the long side the return sits against: return 16, 17 band, supply 21 (derived)

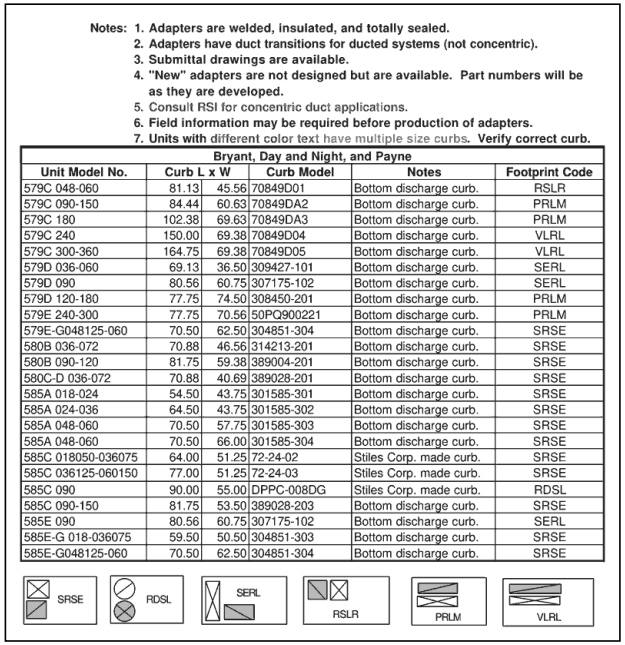

Notes:
1. Adapters are welded, insulated, and totally sealed.
2. Adapters have duct transitions for ducted systems (not concentric).
3. Submittal drawings are available.
4. "New" adapters are not designed but are available. Part numbers will be as they are developed.
5. Consult RSI for concentric duct applications.
6. Field information may be required before production of adapters.
7. Units with different color text have multiple size curbs. Verify correct curb.

Bryant, Day and Night, and Payne

Unit Model No.	Curb L	x W	Curb Model	Notes	Footprint Code
579C 048-060	81.13	45.56	70849D01	Bottom discharge curb.	RSLR
579C 090-150	84.44	60.63	70849DA2	Bottom discharge curb.	PRLM
579C 180	102.38	69.63	70849DA3	Bottom discharge curb.	PRLM
579C 240	150.00	69.38	70849D04	Bottom discharge curb.	VLRL
579C 300-360	164.75	69.38	70849D05	Bottom discharge curb.	VLRL
579D 036-060	69.13	36.50	309427-101	Bottom discharge curb.	SERL
579D 090	80.56	60.75	307175-102	Bottom discharge curb.	SERL
579D 120-180	77.75	74.50	308450-201	Bottom discharge curb.	PRLM
579E 240-300	77.75	70.56	50PQ900221	Bottom discharge curb.	PRLM
579E-G048125-060	70.50	62.50	304851-304	Bottom discharge curb.	SRSE
580B 036-072	70.88	46.56	314213-201	Bottom discharge curb.	SRSE
580B 090-120	81.75	59.38	389004-201	Bottom discharge curb.	SRSE
580C-D 036-072	70.88	40.69	389028-201	Bottom discharge curb.	SRSE
585A 018-024	54.50	43.75	301585-301	Bottom discharge curb.	SRSE
585A 024-036	64.50	43.75	301585-302	Bottom discharge curb.	SRSE
585A 048-060	70.50	57.75	301585-303	Bottom discharge curb.	SRSE
585A 048-060	70.50	66.00	301585-304	Bottom discharge curb.	SRSE
585C 018050-036075	64.00	51.25	72-24-02	Stiles Corp. made curb.	SRSE
585C 036125-060150	77.00	51.25	72-24-03	Stiles Corp. made curb.	SRSE
585C 090	90.00	55.00	DPPC-008DG	Stiles Corp. made curb.	RDSL
585C 090-150	81.75	53.50	389028-203	Bottom discharge curb.	SRSE
585E 090	80.56	60.75	307175-102	Bottom discharge curb.	SERL
585E-G 018-036075	59.50	50.50	304851-303	Bottom discharge curb.	SRSE
585E-G048125-060	70.50	62.50	304851-304	Bottom discharge curb.	SRSE

Curb-maker drawing (UNVERIFIED) · page 2 · https://www.ruskinrooftopsystems.com/Portals/5/bdp_web_adapters.pdf

TOP VIEW · LOOKING DOWN ON THE CURB · TO SCALE

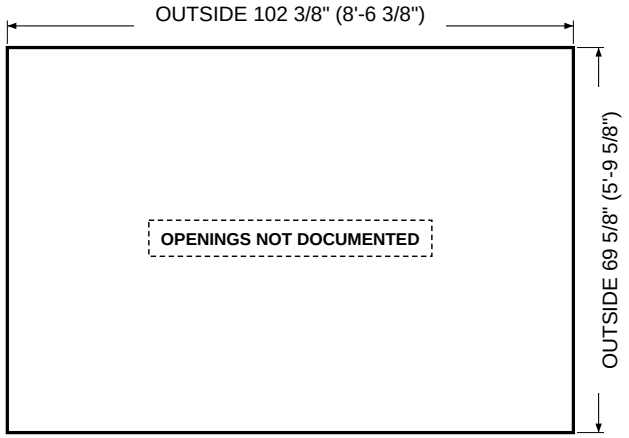

Rail width not documented, so the inside line is not drawn.
Measure here: OUTSIDE of the curb rail with a tape; unit end not documented.

Carrier/Bryant/ICP **UNVERIFIED**
Part # 70849DA3
OUTSIDE 102 3/8 × 69 5/8" · Tons 15 T · legacy

SOURCE EXCERPT (left: the cited page of the manufacturer or curb-maker document) beside our TOP VIEW drawing (right, to scale, looking down).
Openings are drawn only where their offsets are documented; offsets run from the OUTSIDE left end and OUTSIDE bottom side. Curb-maker sources are UNVERIFIED.

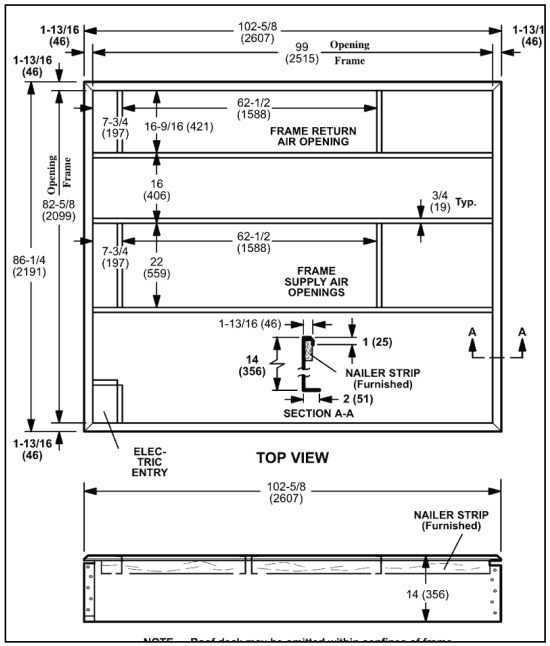

Manufacturer drawing · page 11 · https://tech.lennoxintl.com/C03e7o14l/VIu12Ch2uV/wm_lge_0606.pdf

TOP VIEW · LOOKING DOWN ON THE CURB · TO SCALE

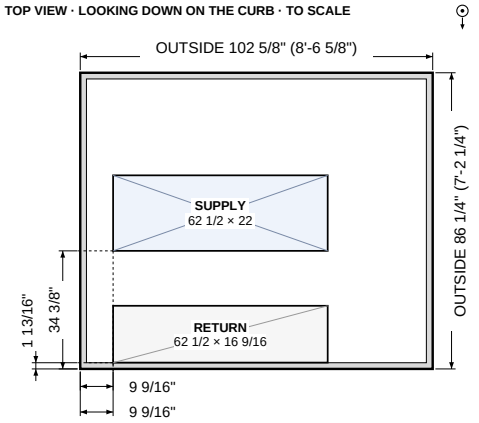

Grey band = curb rail, 1 13/16" wide. Inner line = INSIDE of rail: 99 × 82 5/8" (outside minus 2 × rail, calculated).
Offsets: from the OUTSIDE left end and the OUTSIDE bottom side of the curb to the opening's near edge. Openings are clear inside sizes.
Measure here: OUTSIDE of the curb rail with a tape; unit end not documented.

Lennox VERIFIED
Part # Roof mounting frame with double duct opening, LGB/LGE240H (14 in); catalog number not printed
OUTSIDE 102 5/8 × 86 1/4" · Height 14 in · 20 T · legacy
Ref: openings run along the 102-5/8 length; x from the end the 7-3/4 offsets start (1.8125+7.75), y from the long side the return sits against; sup_y = 1.8125+16.5625+16; derived

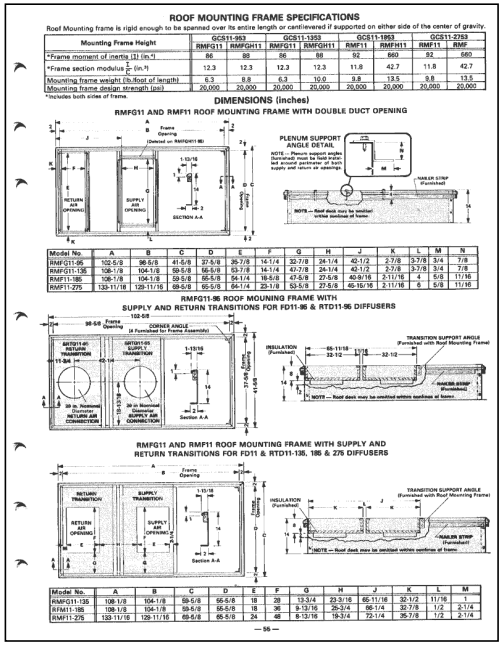

Manufacturer drawing · page 11 · https://tech.lennoxintl.com/C03e7o14l/VIu12Ch2uV/us_ehb_gcs11_8402.pdf

TOP VIEW · LOOKING DOWN ON THE CURB · TO SCALE

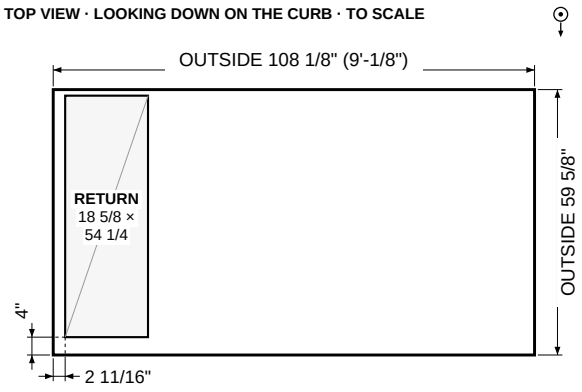

Rail width not documented, so the inside line is not drawn.
Offsets: from the OUTSIDE left end and the OUTSIDE bottom side of the curb to the opening's near edge. Openings are clear inside sizes.
Supply opening 27 5/8 × 47 5/8": size documented, position not documented (not drawn).
Measure here: OUTSIDE of the curb rail with a tape; unit end not documented.

Lennox VERIFIED
Part # RMF11-185 (RMFH11-185 horizontal)
OUTSIDE 108 1/8 × 59 5/8" · Height 14 in · Tons 15 T · legacy
Ref: x from outside left (return) end: return at K, supply at J; return y = L from outside bottom side; supply y not printed

SOURCE EXCERPT (left: the cited page of the manufacturer or curb-maker document) beside our TOP VIEW drawing (right, to scale, looking down).
Openings are drawn only where their offsets are documented; offsets run from the OUTSIDE left end and OUTSIDE bottom side. Curb-maker sources are UNVERIFIED.

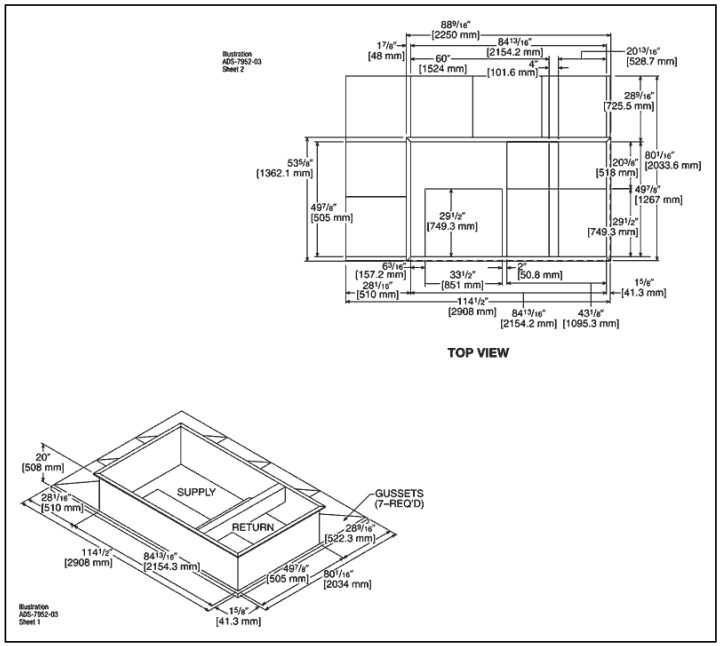

Manufacturer drawing · page 43 · https://resource.gemaire.com/is/content/Watscocom/Gemaire/rheem_rkkl-b090dl15e_article_13745?

TOP VIEW · LOOKING DOWN ON THE CURB · TO SCALE

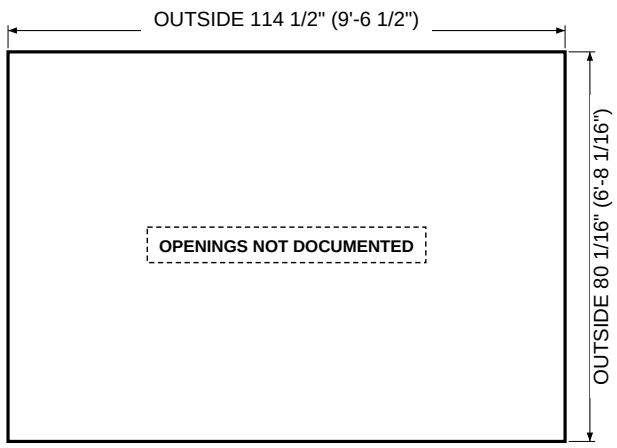

Rail width not documented, so the inside line is not drawn.
Measure here: OUTSIDE of the curb rail with a tape; unit end not documented.

Rheem/Ruud — UNVERIFIED
Part # RXRK-E56
OUTSIDE 114 1/2 × 80 1/16" · legacy

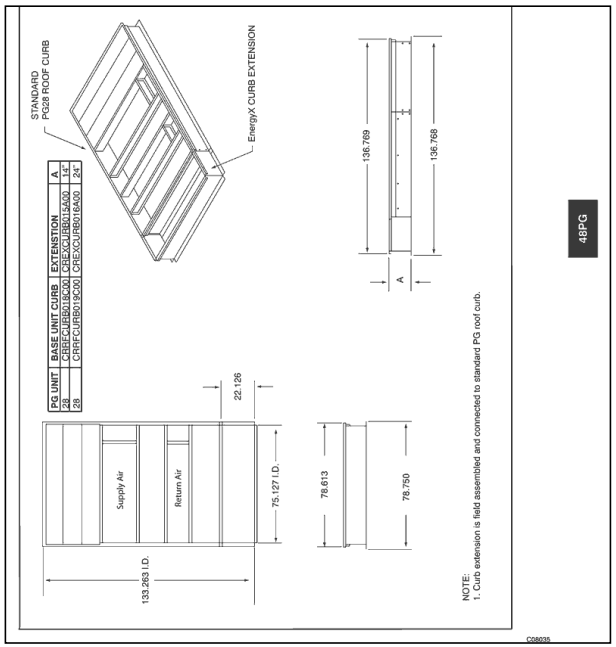

Manufacturer drawing · page 23 · https://www.shareddocs.com/hvac/docs/1009/Public/05/48PG-06PD.pdf

TOP VIEW · LOOKING DOWN ON THE CURB · TO SCALE

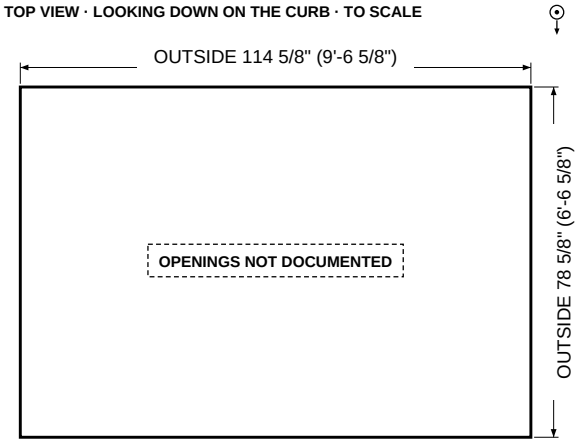

Rail width not documented, so the inside line is not drawn.
Measure here: OUTSIDE of the curb rail with a tape; unit end not documented.

Carrier/Bryant/ICP — CALCULATED
Part # CRRFCURB018C00 (14 in) / CRRFCURB019C00 (24 in) + EnergyX extension CREXCURB015A00/016A00
OUTSIDE 114 5/8 × 78 5/8" · Height 14, 24 in · Tons 20-25 T · legacy
Also OUTSIDE (2nd outline on drawing) 136 3/4 × 78 5/8"

SOURCE EXCERPT (left: the cited page of the manufacturer or curb-maker document) beside our TOP VIEW drawing (right, to scale, looking down).
Openings are drawn only where their offsets are documented; offsets run from the OUTSIDE left end and OUTSIDE bottom side. Curb-maker sources are UNVERIFIED.

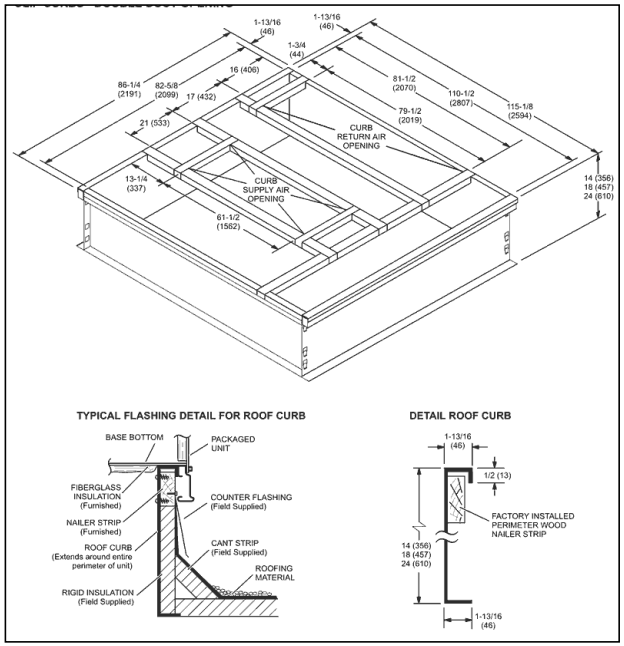

Manufacturer drawing · page 34 · https://tech.lennoxintl.com/C03e7o14l/Vlu12Ch2uV/ehb_lg_21to30_1102_210413_009.pdf

TOP VIEW · LOOKING DOWN ON THE CURB · TO SCALE

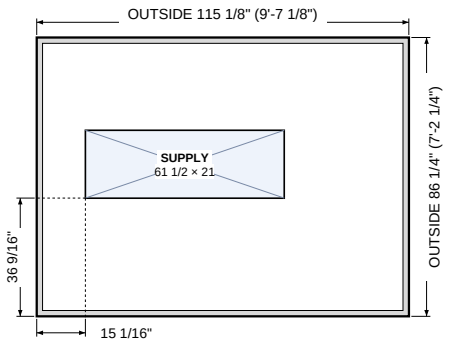

Grey band = curb rail, 1 13/16" wide. Inner line = INSIDE of rail: 111 1/2 × 82 5/8" (outside minus 2 × rail, calculated).
Offsets: from the OUTSIDE left end and the OUTSIDE bottom side of the curb to the opening's near edge. Openings are clear inside sizes.
Return opening 79 1/2 × 16": size documented, position not documented (not drawn).
Measure here: OUTSIDE of the curb rail with a tape; unit end not documented.

Lennox VERIFIED
Part # LARMF30/36S-14 (54K58) / -18 (54K59) / -24 (54K60) clip full perimeter; S6CURB10121 (30W15, 14 in) / S6CURB11121 (30W16, 24 in) standard full perimeter
OUTSIDE 115 1/8 × 86 1/4" · Height 14 / 18 / 24 (clip) / 14 / 24 (standard) in · 21-30 T · legacy
Ref: standard full-perimeter curb (p36); openings run lengthwise; y from the side nearest the return: 1-13/16 rail + 1-3/4 offset; sup_y = 3.5625+16+17; sup_x = 1.8125+13.25 from supply end; all derived; ret_x not dimensioned

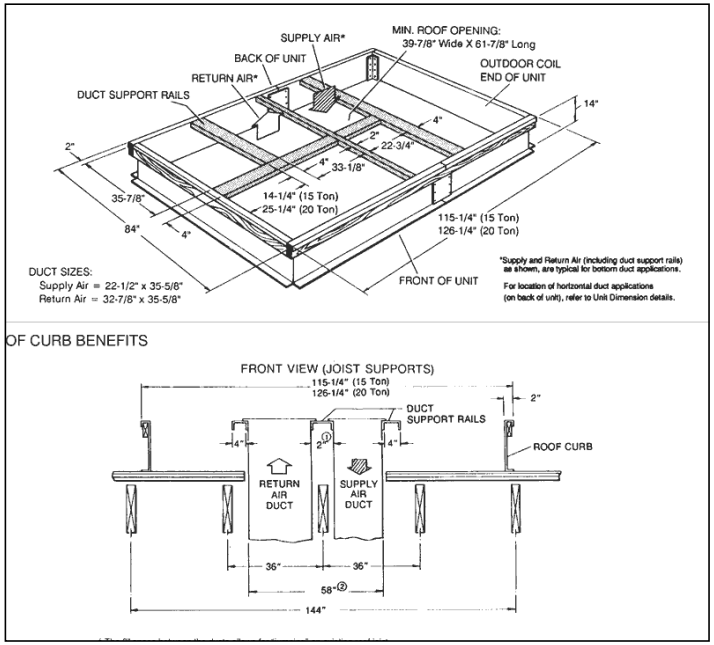

Manufacturer drawing · page 15 · https://www.hvac-talk.com/attachments/york-sunline-d2ce-d2cg-pdf.455101/

TOP VIEW · LOOKING DOWN ON THE CURB · TO SCALE

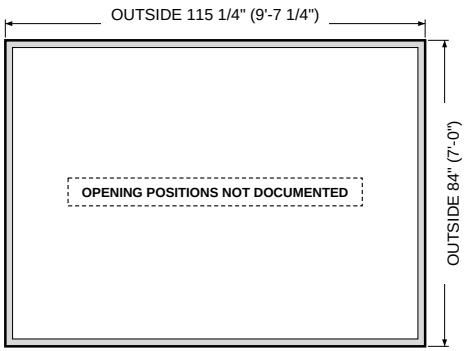

Grey band = curb rail, 2" wide. Inner line = INSIDE of rail: 111 1/4 × 80" (outside minus 2 × rail, calculated).
Supply opening 22 3/4 × 35 7/8": size documented, position not documented (not drawn).
Return opening 33 1/8 × 35 7/8": size documented, position not documented (not drawn).
Measure here: OUTSIDE of the curb rail with a tape; unit end not documented.

York/JCI VERIFIED
Part # 1RC0436
OUTSIDE 115 1/4 × 84" · Height 14 in · 15 T · legacy
Ref: y from the BACK outside side (2 rail + 35-7/8). Along the length from the end opposite the coil: 14-1/4 (B), 4 rail, return 33-1/8, 2 divider, supply 22-3/4, 4 rail; B's origin (outside vs inside of end rail) not resolved, so x omitted (if from the outside: ret_x = 18.25, sup_x = 53.375).

SOURCE EXCERPT (left: the cited page of the manufacturer or curb-maker document) beside our TOP VIEW drawing (right, to scale, looking down).
Openings are drawn only where their offsets are documented; offsets run from the OUTSIDE left end and OUTSIDE bottom side. Curb-maker sources are UNVERIFIED.

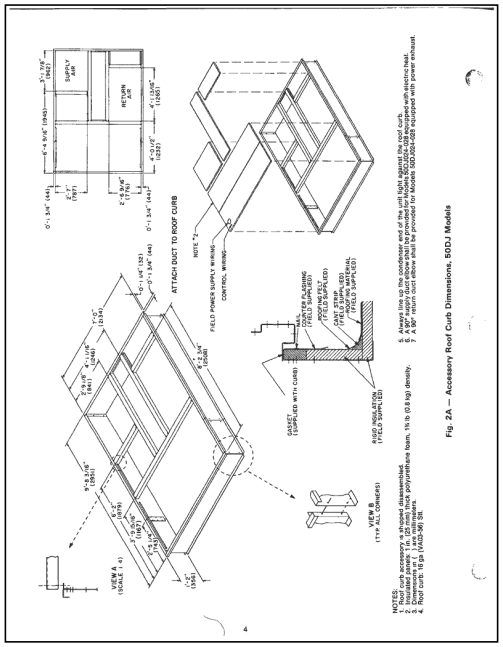

Manufacturer drawing · page 4 · https://www.shareddocs.com/hvac/docs/1005/Public/0E/50DJ_DW-C1SI.pdf

TOP VIEW · LOOKING DOWN ON THE CURB · TO SCALE

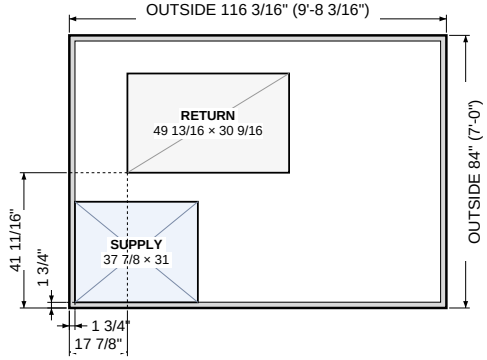

Grey band = curb rail, 1 3/4" wide. Inner line = INSIDE of rail: 112 11/16 × 80 1/2" (outside minus 2 × rail, calculated).
Offsets: from the OUTSIDE left end and the OUTSIDE bottom side of the curb to the opening's near edge. Openings are clear inside sizes.
Measure here: OUTSIDE of the curb rail with a tape; unit end not documented.

Carrier/Bryant/ICP VERIFIED
Part # 50DJ/DW024-028 accessory roof curb (1987 doc; Carrier accessory no. not legible in drawing)
OUTSIDE 116 3/16 × 84" · Height 14 in · Tons 20-25 T · legacy
Ref: x from the outside of the supply end (end opposite the 6'-4 9/16 / 4'-0 1/2 baselines), y from the supply-side rail; sup_x = rail 0'-1 3/4 (6'-4 9/16 + 3'-1 7/8 + 1 3/4 = 116.19 closes); ret_x derived 116.1875-48.5-49.8125; ret_y derived 74-1.75-30.5625

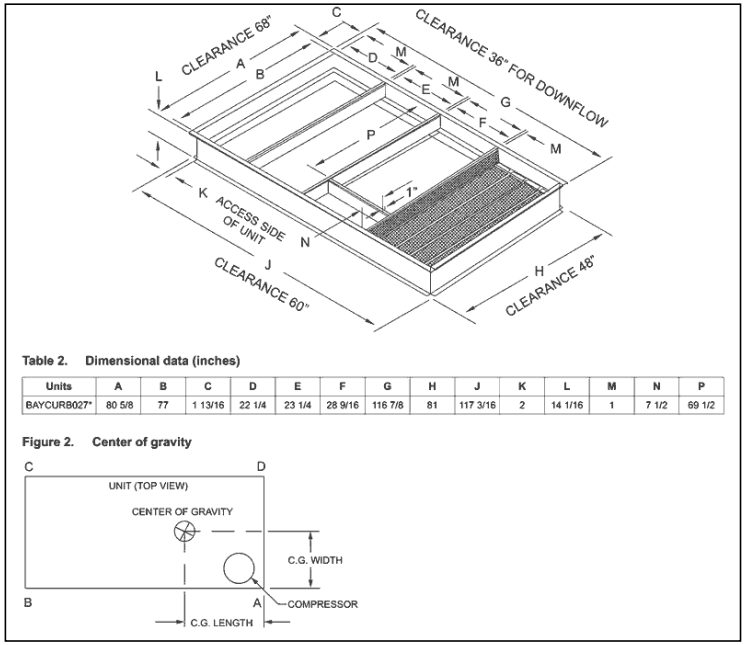

Table 2. Dimensional data (inches)

Units	A	B	C	D	E	F	G	H	J	K	L	M	N	P
BAYCURB027*	80 5/8	77	1 13/16	22 1/4	23 1/4	28 9/16	116 7/8	81	117 3/16	2	14 1/16	1	7 1/2	69 1/2

Figure 2. Center of gravity

Manufacturer drawing · page 5 · https://elibrary.tranetechnologies.com/public/commercial-hvac/Literature/Installation/ACC-SVN73P-EN_091520

TOP VIEW · LOOKING DOWN ON THE CURB · TO SCALE

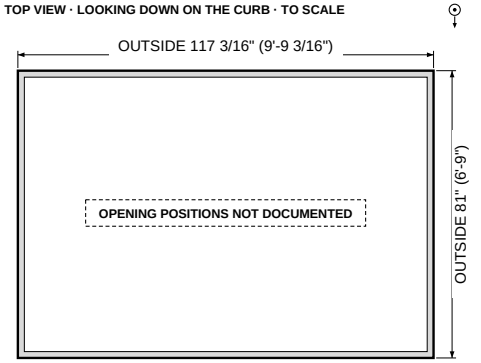

Grey band = curb rail, 1 13/16" wide. Inner line = INSIDE of rail: 113 9/16 × 77 3/8" (outside minus 2 × rail, calculated).
Supply opening 28 9/16 × 69 1/2": size documented, position not documented (not drawn).
Return opening 22 1/4 × 69 1/2": size documented, position not documented (not drawn).
Measure here: OUTSIDE of the curb rail with a tape; unit end not documented.

Trane/American Standard VERIFIED
Part # BAYCURB027B / BAYCURB027* (same footprint: FIACURB404*/804* Precedent 12.5-25 D cabinet)
OUTSIDE 117 3/16 × 81" · Height 14-1/16 (FIACURB804*: 18-1/16) in · 15-25 T · legacy
Also OUTSIDE (2nd outline on drawing) 116 7/8 × 80 5/8"
Ref: x from outside of base at the return end: (117-3/16-116-7/8)/2 + C 1-13/16 + D 22-1/4 + M 1 + E 23-1/4 + M 1 (derived from Table 2); y not dimensioned (openings 69-1/2 within 77 inside width)

SOURCE EXCERPT (left: the cited page of the manufacturer or curb-maker document) beside our TOP VIEW drawing (right, to scale, looking down).
Openings are drawn only where their offsets are documented; offsets run from the OUTSIDE left end and OUTSIDE bottom side. Curb-maker sources are UNVERIFIED.

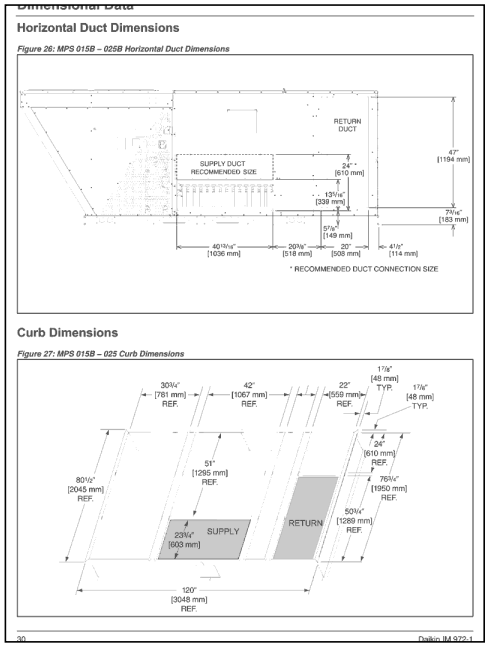
Dimensional Data

Horizontal Duct Dimensions

Figure 26: MPS 015B – 025B Horizontal Duct Dimensions

Curb Dimensions

Figure 27: MPS 015B – 025 Curb Dimensions

30 Daikin IM 972-1

Manufacturer drawing · page 30 · https://www.stinebaugh.com/wp-content/uploads/DAIKIN-APPLIED-Maverick-I-MPS-15-25-Ton.pdf

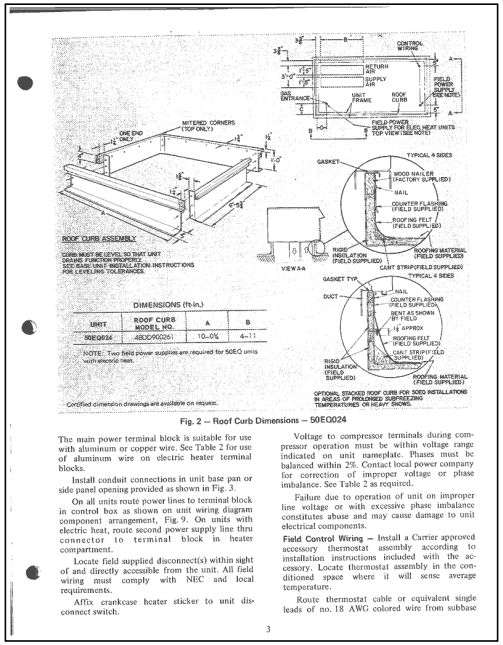

DIMENSIONS (ft-in.)

UNIT	ROOF CURB MODEL NO.	A	B
50EQ024	48DD900261	10–0¾	4–11

NOTE: Two field power supplies are required for 50EQ units with electric heat.

Fig. 2 — Roof Curb Dimensions — 50EQ024

The main power terminal block is suitable for use with aluminum or copper wire. See Table 2 for use of aluminum wire on electric heater terminal blocks.

Install conduit connections in unit base pan or side panel opening provided as shown in Fig. 3.

On all units route power lines to terminal block in control box as shown on unit wiring diagram component arrangement, Fig. 9. On units with electric heat, route second power supply line thru connector to terminal block in heater compartment.

Locate field supplied disconnect(s) within sight of and directly accessible from the unit. All field wiring must comply with NEC and local requirements.

Affix crankcase heater sticker to unit disconnect switch.

Voltage to compressor terminals during compressor operation must be within voltage range indicated on unit nameplate. Phases must be balanced within 2%. Contact local power company for correction of improper voltage or phase imbalance. See Table 2 as required.

Failure due to operation of unit on improper line voltage or with excessive phase imbalance constitutes abuse and may cause damage to unit electrical components.

Field Control Wiring — Install a Carrier approved accessory thermostat assembly according to installation instructions included with the accessory. Locate thermostat assembly in the conditioned space where it will sense average temperature.

Route thermostat cable or equivalent single leads of no. 18 AWG colored wire from subbase

3

Manufacturer drawing · page 3 · https://www.shareddocs.com/hvac/docs/1005/Public/0A/50EQ-1SI.pdf

TOP VIEW · LOOKING DOWN ON THE CURB · TO SCALE

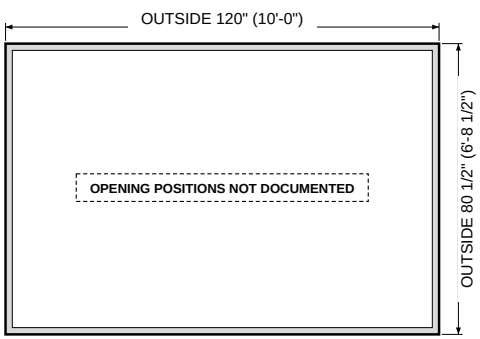

Grey band = curb rail, 1 7/8" wide. Inner line = INSIDE of rail: 116 1/4 × 76 3/4" (outside minus 2 × rail, calculated).

Supply opening 42 × 23 3/4": size documented, position not documented (not drawn).

Return opening 22 × 50 3/4": size documented, position not documented (not drawn).

Measure here: OUTSIDE of the curb rail with a tape; unit end not documented.

Daikin/Goodman/Amana VERIFIED
Part # MPS 015B-025B factory roof curb (P/N not printed)
OUTSIDE 120 × 80 1/2" · Height (not stated on figure) in · 15-25 T · legacy
Ref: x from the RETURN end outside edge: return starts right after the 1 7/8 rail; sup_x = 120 - 30 3/4 - 42 (derived). Across-width offsets not given: the printed 51 REF / 24 REF stack-ups do not close against 80 1/2, so sup_y/ret_y left out

TOP VIEW · LOOKING DOWN ON THE CURB · TO SCALE

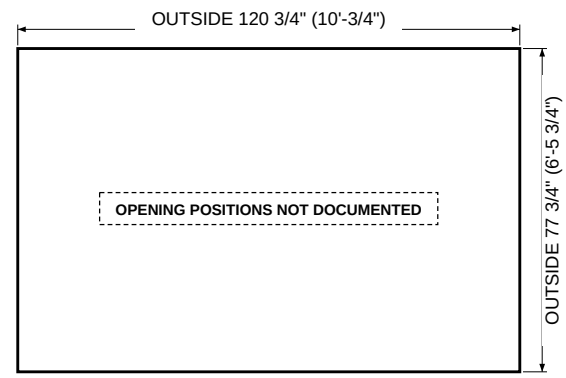

Rail width not documented, so the inside line is not drawn.

Supply opening 59 × 17": size documented, position not documented (not drawn).

Return opening 59 × 17": size documented, position not documented (not drawn).

Measure here: OUTSIDE of the curb rail with a tape; unit end not documented.

Carrier/Bryant/ICP UNVERIFIED
Part # 48DD900261
OUTSIDE 120 3/4 × 77 3/4" · Height 12 in · Tons 20 T · legacy
Ref: x from the curb end nearest the openings (left in Carrier top view); openings run along the length side; return opening 3-3/8 in from the top (long) side, supply 2 in below it (3'-0" over both); y not given from the bottom side

SOURCE EXCERPT (left: the cited page of the manufacturer or curb-maker document) beside our TOP VIEW drawing (right, to scale, looking down).
Openings are drawn only where their offsets are documented; offsets run from the OUTSIDE left end and OUTSIDE bottom side. Curb-maker sources are UNVERIFIED.

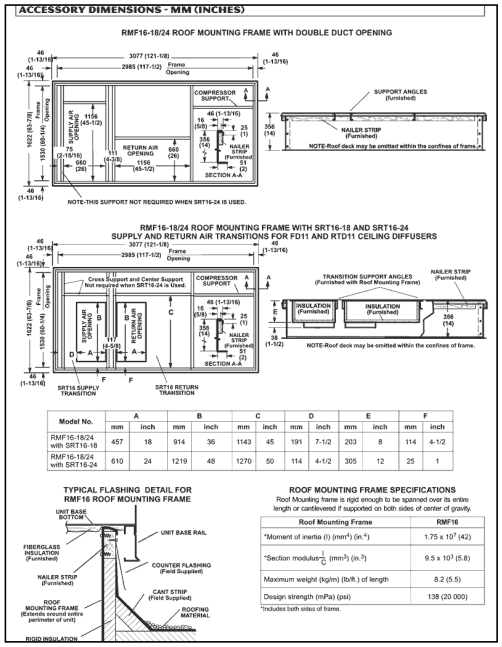

ACCESSORY DIMENSIONS - MM (INCHES)

RMF16-18/24 ROOF MOUNTING FRAME WITH DOUBLE DUCT OPENING

RMF16-18/24 ROOF MOUNTING FRAME WITH SRT16-18 AND SRT16-24
SUPPLY AND RETURN AIR TRANSITIONS FOR FD11 AND RTD11 CEILING DIFFUSERS

Model No.	A		B		C		D		E		F	
	mm	inch	mm	inch	mm	inch	mm	inch	mm	inch	mm	inch
RMF16-18/24 with SRT16-18	457	18	914	36	1143	45	191	7-1/2	203	8	114	4-1/2
RMF16-18/24 with SRT16-24	610	24	1219	48	1270	50	114	4-1/2	305	12	25	1

TYPICAL FLASHING DETAIL FOR RMF16 ROOF MOUNTING FRAME

ROOF MOUNTING FRAME SPECIFICATIONS

Roof Mounting frame is rigid enough to be spanned over its entire length or cantilevered if supported on both sides of center of gravity.

Roof Mounting Frame	RMF16
*Moment of inertia (I) (mm⁴) (in.⁴)	1.75 x 10⁷ (42)
*Section modulus $\frac{I}{C}$ (mm³) (in.³)	9.5 x 10³ (5.8)
Maximum weight (kg/m) (lb/ft.) of length	8.2 (5.5)
Design strength (mPa) (psi)	138 (20 000)

*Includes both sides of frame.

Manufacturer drawing · page 14 · https://tech.lennoxintl.com/C03e7o14l/Vlu12Ch2uV/50hz_gcs16lrg_0700.pdf

TOP VIEW · LOOKING DOWN ON THE CURB · TO SCALE

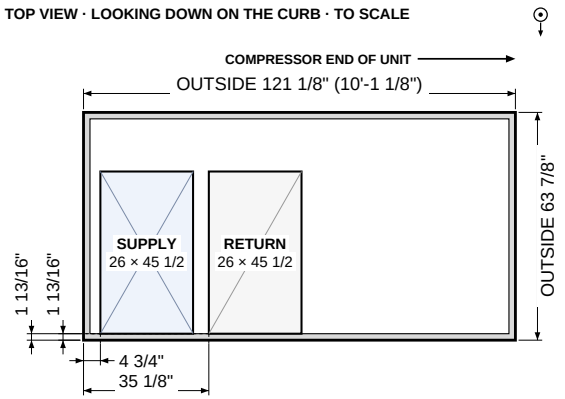

Grey band = curb rail, 1 13/16" wide. Inner line = INSIDE of rail: 117 1/2 × 60 1/4" (outside minus 2 × rail, calculated).

Offsets: from the OUTSIDE left end and the OUTSIDE bottom side of the curb to the opening's near edge. Openings are clear inside sizes.

Measure here: OUTSIDE of the curb rail with a tape.

Lennox VERIFIED
Part # RMF16-18/24
OUTSIDE 121 1/8 × 63 7/8" · Height 14 in · 15-20 T · legacy
Ref: x from the supply end (compressor support at the other end): 1-13/16 rail + 2-15/16 = 4-3/4 to supply, +26 +4-3/8 = 35-1/8 to return (derived); y from the long side the 45-1/2 is dimensioned from (derived = rail)

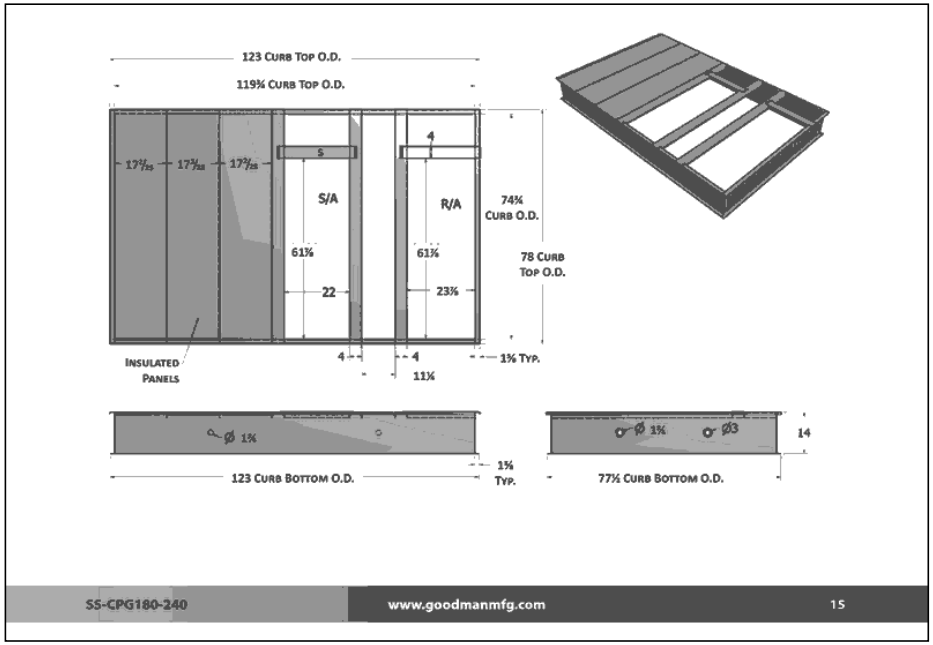

Manufacturer drawing · page 15 · https://archive.org/download/manualsbase-id-4496/4496.pdf

TOP VIEW · LOOKING DOWN ON THE CURB · TO SCALE

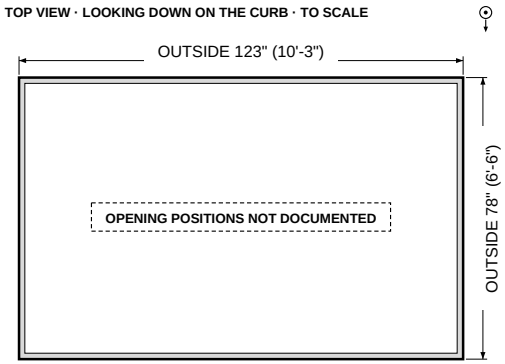

Grey band = curb rail, 1 5/8" wide. Inner line = INSIDE of rail: 119 3/4 × 74 3/4" (outside minus 2 × rail, calculated).

Supply opening 22 × 61 7/8": size documented, position not documented (not drawn).

Return opening 23 7/8 × 61 7/8": size documented, position not documented (not drawn).

Measure here: OUTSIDE of the curb rail with a tape; unit end not documented.

Daikin/Goodman/Amana VERIFIED
Part # 14CURB180300 / 18CURB180300 / 24CURB180300 (Daikin); 14CURB180240 (Goodman CPG/CPC 180-240)
OUTSIDE 123 × 78" · Height 14, 18, 24 in · 15-25 T · legacy
Ref: x from the RETURN end outside edge (right in SS-CPG180-240 plan): rail 1.625, R/A 23.875, 4 support, 11.25, 4 support, then S/A; sup_x = 1.625+23.875+4+11.25+4 (derived); across-width offsets not dimensioned clearly, left out

SOURCE EXCERPT (left: the cited page of the manufacturer or curb-maker document) beside our TOP VIEW drawing (right, to scale, looking down).
Openings are drawn only where their offsets are documented; offsets run from the OUTSIDE left end and OUTSIDE bottom side. Curb-maker sources are UNVERIFIED.

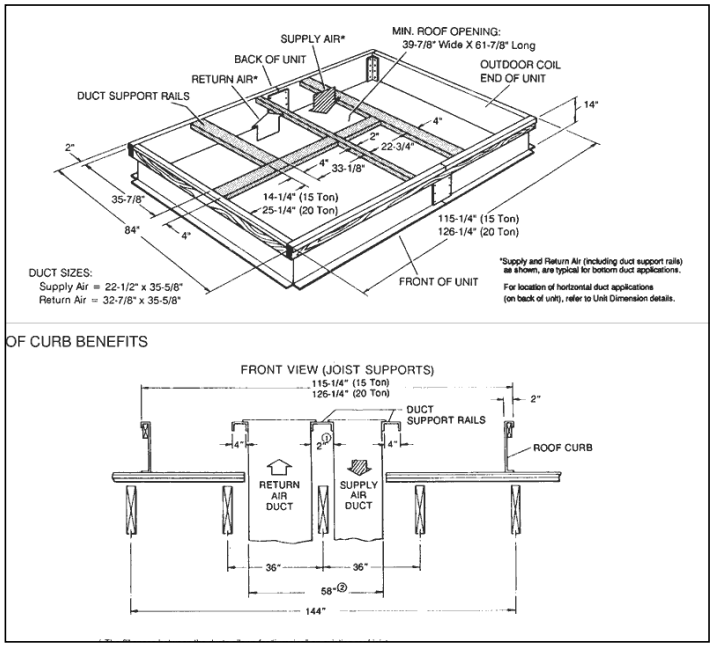

Manufacturer drawing · page 15 · https://www.hvac-talk.com/attachments/york-sunline-d2ce-d2cg-pdf.455101/

TOP VIEW · LOOKING DOWN ON THE CURB · TO SCALE

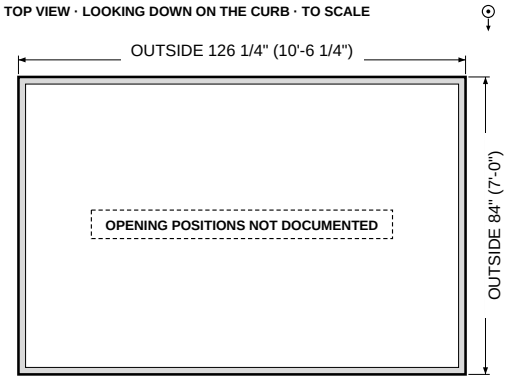

Grey band = curb rail, 2" wide. Inner line = INSIDE of rail: 122 1/4 × 80" (outside minus 2 × rail, calculated).
Supply opening 22 3/4 × 35 7/8": size documented, position not documented (not drawn).
Return opening 33 1/8 × 35 7/8": size documented, position not documented (not drawn).
Measure here: OUTSIDE of the curb rail with a tape; unit end not documented.

York/JCI VERIFIED
Part # 1RC0437
OUTSIDE 126 1/4 × 84" · Height 14 in · 20-25 T · legacy
Ref: y from the BACK outside side (2 rail + 35-7/8). Along the length from the end opposite the coil: 25-1/4 (B), 4 rail, return 33-1/8, 2 divider, supply 22-3/4, 4 rail; B's origin not resolved, so x omitted (if from the outside: ret_x = 29.25, sup_x = 64.375).

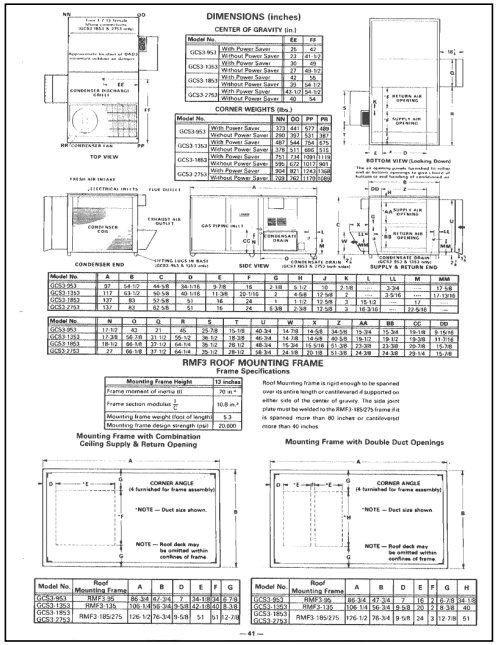

Manufacturer drawing · page 5 · https://tech.lennoxintl.com/C03e7o14l/VIu12Ch2uV/us_ehb_gcs3-953-2753_7910.pdf

TOP VIEW · LOOKING DOWN ON THE CURB · TO SCALE

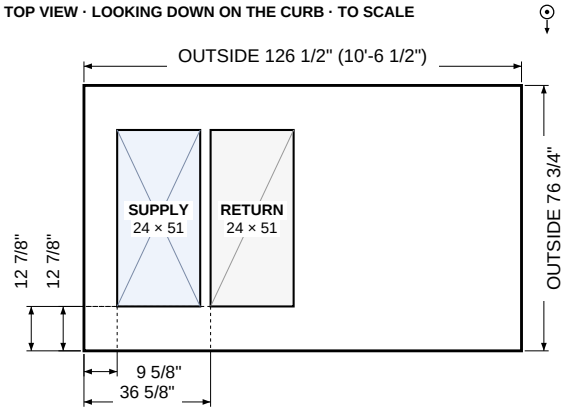

Rail width not documented, so the inside line is not drawn.
Offsets: from the OUTSIDE left end and the OUTSIDE bottom side of the curb to the opening's near edge. Openings are clear inside sizes.
Measure here: OUTSIDE of the curb rail with a tape; unit end not documented.

Lennox VERIFIED
Part # RMF3-185/275
OUTSIDE 126 1/2 × 76 3/4" · Height 13 in · Tons 15-22.5 T · legacy
Ref: x from the outside left end (dimension D, then E, F); y = G from the outside bottom side; which of the two openings is supply is not marked on the frame drawing (first opening assigned to sup arbitrarily)

SOURCE EXCERPT (left: the cited page of the manufacturer or curb-maker document) beside our TOP VIEW drawing (right, to scale, looking down).
Openings are drawn only where their offsets are documented; offsets run from the OUTSIDE left end and OUTSIDE bottom side. Curb-maker sources are UNVERIFIED.

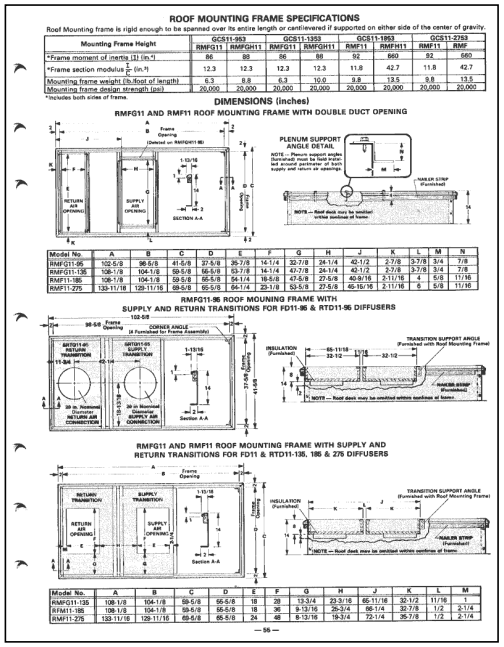

ROOF MOUNTING FRAME SPECIFICATIONS

Roof Mounting frame is rigid enough to be spanned over its entire length or cantilevered if supported on either side of the center of gravity.

Mounting Frame Height	GCS11-063		GCS11-1353		GCS11-1953		GCS11-2763	
	RMFG11	RMFGH11	RMFG11	RMFGH11	RMF11	RMFH11	RMF11	RMF
*Frame moment of inertia (I) (in.⁴)	86	88	86	88	92	660	92	660
*Frame section modulus S= (in.³)	12.3	12.3	12.3	12.3	11.8	42.7	11.8	42.7
Mounting frame weight (lb./foot of length)	6.3	8.8	6.3	10.0	9.8	13.5	9.8	13.5
Mounting frame design strength (psi)	20,000	20,000	20,000	20,000	20,000	20,000	20,000	20,000

*Includes both sides of frame.

DIMENSIONS (inches)

RMFG11 AND RMF11 ROOF MOUNTING FRAME WITH DOUBLE DUCT OPENING

PLENUM SUPPORT ANGLE DETAIL

Model No.	A	B	C	D	E	F	G	H	J	K	L	M	N
RMFG11-05	102-5/8	98-5/8	41-5/8	37-5/8	35-7/8	14-1/4	32-7/8	24-1/4	42-1/2	2-7/8	3-7/8	3/4	7/8
RMFG11-135	108-1/8	104-1/8	59-5/8	55-5/8	53-7/8	14-1/4	47-7/8	24-1/4	42-1/2	2-7/8	3-7/8	3/4	7/8
RMF11-186	108-1/8	104-1/8	59-5/8	55-5/8	54-1/4	16-5/8	47-5/8	27-5/8	49-7/16	2-11/16	4	5/8	11/16
RMF11-275	133-11/16	129-11/16	69-5/8	65-5/8	64-1/4	23-1/8	53-5/8	27-5/8	49-15/16	2-11/16	6	5/8	11/16

RMFG11-96 ROOF MOUNING FRAME WITH SUPPLY AND RETURN TRANSITIONS FOR FD11-96 & RTD11-96 DIFFUSERS

RMFG11 AND RMF11 ROOF MOUNTING FRAME WITH SUPPLY AND RETURN TRANSITIONS FOR FD11 & RTD11-135, 186 & 276 DIFFUSERS

Model No.	A	B	C	D	E	F	G	H	J	K	L	M
RMFG11-135	108-1/8	104-1/8	59-5/8	55-5/8	18	28	13-3/4	23-3/16	65-11/16	32-1/2	11/16	1
RMF11-186	108-1/8	104-1/8	59-5/8	55-5/8	18	36	9-13/16	29-3/4	86-1/4	32-7/8	1/2	2-1/4
RMF11-275	133-11/16	129-11/16	69-5/8	65-5/8	24	48	8-13/16	19-3/4	72-1/4	35-7/8	1/2	2-1/4

— 55 —

Manufacturer drawing · page 11 · https://tech.lennoxintl.com/C03e7o14l/Vlu12Ch2uV/us_ehb_gcs11_8402.pdf

TOP VIEW · LOOKING DOWN ON THE CURB · TO SCALE

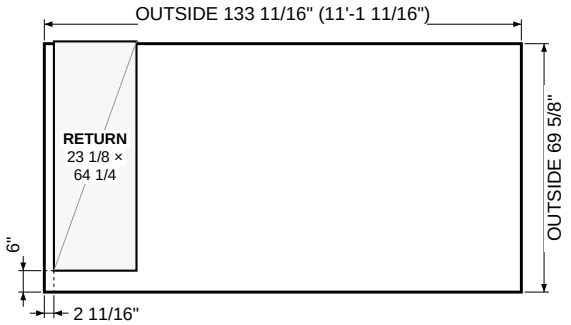

Rail width not documented, so the inside line is not drawn.
Offsets: from the OUTSIDE left end and the OUTSIDE bottom side of the curb to the opening's near edge. Openings are clear inside sizes.
Supply opening 27 5/8 × 53 5/8": size documented, position not documented (not drawn).
Check: an opening runs past the outline on file.
Measure here: OUTSIDE of the curb rail with a tape; unit end not documented.

Lennox VERIFIED
Part # RMF11-275 (RMFH11-275 horizontal)
OUTSIDE 133 11/16 × 69 5/8" · Height 14 in · Tons 22.5 T · legacy
Ref: x from outside left (return) end: return at K, supply at J; return y = L from outside bottom side; supply y not printed

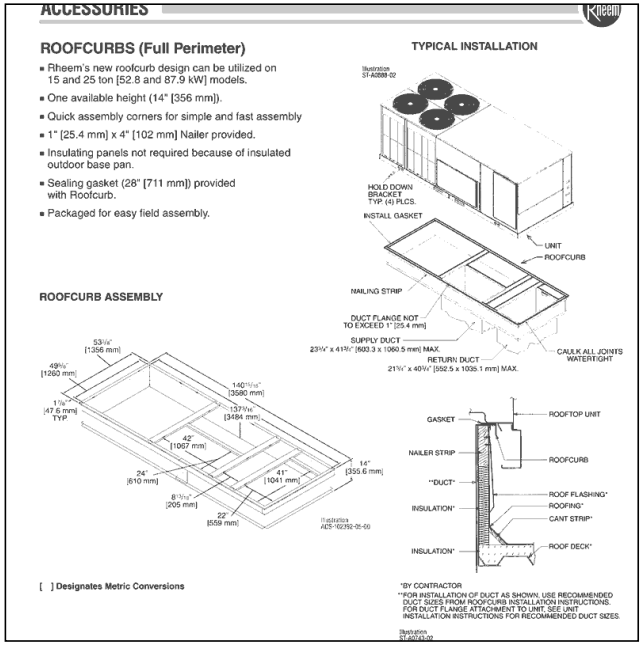

ACCESSORIES

ROOFCURBS (Full Perimeter)

- Rheem's new roofcurb design can be utilized on 15 and 25 ton [52.8 and 87.9 kW] models.
- One available height (14" [356 mm]).
- Quick assembly corners for simple and fast assembly
- 1" [25.4 mm] x 4" [102 mm] Nailer provided.
- Insulating panels not required because of insulated outdoor base pan.
- Sealing gasket (28" [711 mm]) provided with Roofcurb.
- Packaged for easy field assembly.

TYPICAL INSTALLATION

HOLD DOWN BRACKET TYP. (4) PLCS.
INSTALL GASKET
UNIT
ROOFCURB
NAILING STRIP
DUCT FLANGE NOT TO EXCEED 1" [25.4 mm]
SUPPLY DUCT
CAULK ALL JOINTS WATERTIGHT
RETURN DUCT

ROOFCURB ASSEMBLY

GASKET
NAILER STRIP
"DUCT"
INSULATION*
ROOFTOP UNIT
ROOFCURB
ROOF FLASHING*
ROOFING*
CANT STRIP*
ROOF DECK

[ ] Designates Metric Conversions

*BY CONTRACTOR
**FOR INSTALLATION OF DUCT AS SHOWN, USE RECOMMENDED DUCT SIZES FROM ROOFCURB INSTALLATION INSTRUCTIONS. FOR DUCT FLANGE ATTACHMENT TO UNIT, SEE UNIT INSTALLATION INSTRUCTIONS FOR RECOMMENDED DUCT SIZES.

Manufacturer drawing · page 50 · https://www.southernpipe.com/ASSETS/DOCUMENTS/CMS/EN/RHRXRNAD80_Catalog.pdf

TOP VIEW · LOOKING DOWN ON THE CURB · TO SCALE

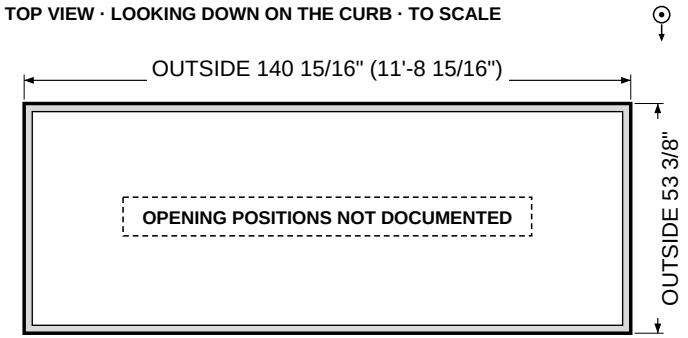

Grey band = curb rail, 1 7/8" wide. Inner line = INSIDE of rail: 137 3/16 × 49 5/8" (outside minus 2 × rail, calculated).
Supply opening 42 × 24": size documented, position not documented (not drawn).
Return opening 41 × 22": size documented, position not documented (not drawn).
Measure here: OUTSIDE of the curb rail with a tape; unit end not documented.

Rheem/Ruud VERIFIED
Part # RXKG-CAF14
OUTSIDE 140 15/16 × 53 3/8" · Height 14 in · 15-25 T · legacy
Ref: sizes only from isometric ADS-102392-05-00 (supply 42 along length x 24 across, return 41 x 22, 8-13/16 deck between); end offsets not printed so no x/y; rail 1-7/8 TYP printed

SOURCE EXCERPT (left: the cited page of the manufacturer or curb-maker document) beside our TOP VIEW drawing (right, to scale, looking down).
Openings are drawn only where their offsets are documented; offsets run from the OUTSIDE left end and OUTSIDE bottom side. Curb-maker sources are UNVERIFIED.

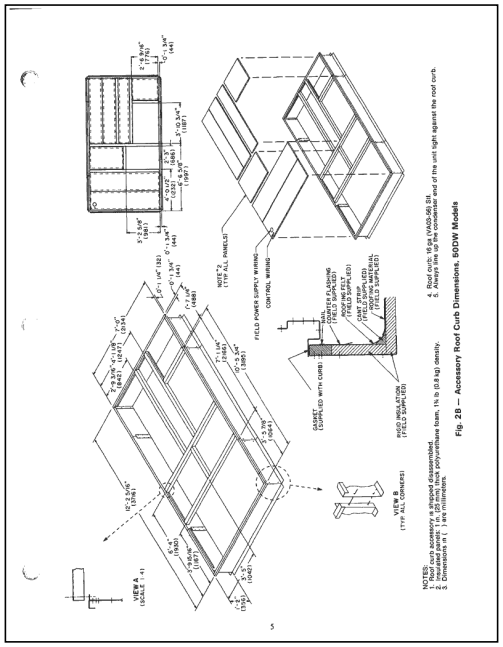

Manufacturer drawing · page 5 · https://www.shareddocs.com/hvac/docs/1005/Public/0E/50DJ_DW-C1SI.pdf

TOP VIEW · LOOKING DOWN ON THE CURB · TO SCALE

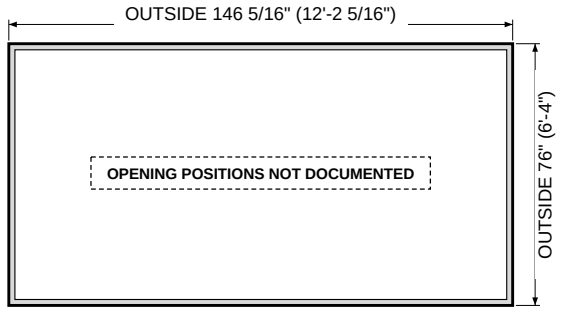

Grey band = curb rail, 1 3/4" wide. Inner line = INSIDE of rail: 142 13/16 × 72 1/2" (outside minus 2 × rail, calculated).
Return opening 46 3/4 × 30 9/16": size documented, position not documented (not drawn).
Measure here: OUTSIDE of the curb rail with a tape; unit end not documented.

Carrier/Bryant/ICP — **VERIFIED**
Part # 50DW024-028 accessory roof curb (1987 doc; accessory no. not legible) | Carrier no. 50DJ900401 (accessory roof curb for 48DJ/48DK024-030 gas units, Carrier 48DJ,DK024-030 installation instructions Fig. 2 p6: 12'-2 5/16" x 6'-4" x 1'-2")
OUTSIDE 146 5/16 × 76" · Height 14 in · Tons 20-25 T · legacy
Ref: return size by analogy with the 50DJ Fig 2A layout (2'-6 9/16 across with 0'-1 3/4 rail); supply size/positions not resolvable from this scan - left out

Notes:
1. **Adapters are welded, insulated, and totally sealed.**
2. **Adapters have duct transitions for ducted systems (not concentric).**
3. **Submittal drawings are available.**
4. **"New" adapters are not designed but are available. Part numbers will be as they are developed.**
5. **Consult RSI for concentric duct applications.**
6. **Field information may be required before production of adapters.**
7. **Units with different color text have multiple size curbs. Verify correct curb.**

Bryant, Day and Night, and Payne

Unit Model No.	Curb L	x W	Curb Model	Notes	Footprint Code
579C 048-060	81.13	45.56	70849D01	Bottom discharge curb.	RSLR
579C 090-150	84.44	60.63	70849DA2	Bottom discharge curb.	PRLM
579C 180	102.38	69.63	70849DA3	Bottom discharge curb.	PRLM
579C 240	150.00	69.38	70849D04	Bottom discharge curb.	VLRL
579C 300-360	164.75	69.38	70849D05	Bottom discharge curb.	VLRL
579D 036-060	69.13	36.50	309427-101	Bottom discharge curb.	SERL
579D 090	80.56	60.75	307175-102	Bottom discharge curb.	SERL
579D 120-180	77.75	74.50	308450-201	Bottom discharge curb.	PRLM
579E 240-300	77.75	70.56	50PQ900221	Bottom discharge curb.	PRLM
579E-G048125-060	70.50	62.50	304851-304	Bottom discharge curb.	SRSE
580B 036-072	70.88	46.56	314213-201	Bottom discharge curb.	SRSE
580B 090-120	81.75	59.38	389004-201	Bottom discharge curb.	SRSE
580C-D 036-072	70.88	40.69	389028-201	Bottom discharge curb.	SRSE
585A 018-024	54.50	43.75	301585-301	Bottom discharge curb.	SRSE
585A 024-036	64.50	43.75	301585-302	Bottom discharge curb.	SRSE
585A 048-060	70.50	57.75	301585-303	Bottom discharge curb.	SRSE
585A 048-060	70.50	66.00	301585-304	Bottom discharge curb.	SRSE
585C 018050-036075	64.00	51.25	72-24-02	Stiles Corp. made curb.	SRSE
585C 036125-060150	77.00	51.25	72-24-03	Stiles Corp. made curb.	SRSE
585C 090	90.00	55.00	DPPC-008DG	Stiles Corp. made curb.	RDSL
585C 090-150	81.75	53.50	389028-203	Bottom discharge curb.	SRSE
585E 090	80.56	60.75	307175-102	Bottom discharge curb.	SERL
585E-G 018-036075	59.50	50.50	304851-303	Bottom discharge curb.	SRSE
585E-G048125-060	70.50	62.50	304851-304	Bottom discharge curb.	SRSE



Curb-maker drawing (UNVERIFIED) · page 2 · https://www.ruskinrooftopsystems.com/Portals/5/bdp_web_adapters.pdf

TOP VIEW · LOOKING DOWN ON THE CURB · TO SCALE

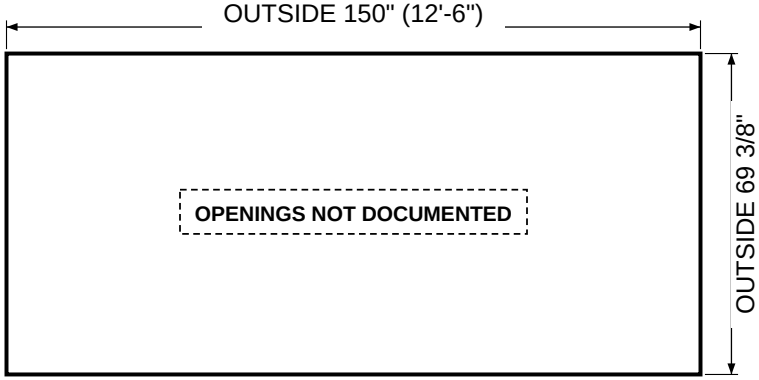

Rail width not documented, so the inside line is not drawn.
Measure here: OUTSIDE of the curb rail with a tape; unit end not documented.

Carrier/Bryant/ICP — **UNVERIFIED**
Part # 70849D04
OUTSIDE 150 × 69 3/8" · Tons 20 T · legacy

SOURCE EXCERPT (left: the cited page of the manufacturer or curb-maker document) beside our TOP VIEW drawing (right, to scale, looking down).
Openings are drawn only where their offsets are documented; offsets run from the OUTSIDE left end and OUTSIDE bottom side. Curb-maker sources are UNVERIFIED.

No source excerpt on file for this curb

TOP VIEW · LOOKING DOWN ON THE CURB · TO SCALE

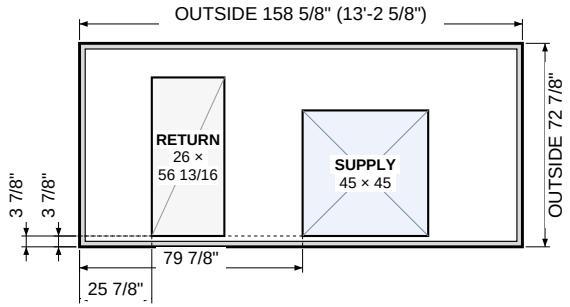

Grey band = curb rail, 2" wide. Inner line = INSIDE of rail: 154 5/8 × 68 7/8" (outside minus 2 × rail, calculated).
Offsets: from the OUTSIDE left end and the OUTSIDE bottom side of the curb to the opening's near edge. Openings are clear inside sizes.
Measure here: OUTSIDE of the curb rail with a tape; unit end not documented.

Daikin/Goodman/Amana — CALCULATED
Part # Rebel standard roof curb – large cabinet (P/N not printed)
OUTSIDE 158 5/8 × 72 7/8" · Height 14, 24 in · 16-28 T · legacy
Ref: x from the electrical-entrance end, y from the LEFT side; sup_x = 2.0+23.9+26.0+28.0, ret_x = 2.0+23.9 (derived, stack 23.9+26.0+28.0+45.0+31.7 = 154.6 closes); y = 2.0 rail + 1.9 printed gap (1.9 read as from the inner rail face; derived)

Notes:
1. **Adapters are welded, insulated, and totally sealed.**
2. **Adapters have duct transitions for ducted systems (not concentric).**
3. **Submittal drawings are available.**
4. **"New" adapters are not designed but are available. Part numbers will be as they are developed.**
5. **Consult RSI for concentric duct applications.**
6. **Field information may be required before production of adapters.**
7. **Units with different color text have multiple size curbs. Verify correct curb.**

Bryant, Day and Night, and Payne

Unit Model No.	Curb L	x W	Curb Model	Notes	Footprint Code
579C 048-060	81.13	45.56	70849D01	Bottom discharge curb.	RSLR
579C 090-150	84.44	60.63	70849DA2	Bottom discharge curb.	PRLM
579C 180	102.38	69.63	70849DA3	Bottom discharge curb.	PRLM
579C 240	150.00	69.38	70849D04	Bottom discharge curb.	VLRL
579C 300-360	164.75	69.38	70849D05	Bottom discharge curb.	VLRL
579D 036-060	69.13	36.50	309427-101	Bottom discharge curb.	SERL
579D 090	80.56	60.75	307175-102	Bottom discharge curb.	SERL
579D 120-180	77.75	74.50	308450-201	Bottom discharge curb.	PRLM
579E 240-300	77.75	70.56	50PQ900221	Bottom discharge curb.	PRLM
579E-G048125-060	70.50	62.50	304851-304	Bottom discharge curb.	SRSE
580B 036-072	70.88	46.56	314213-201	Bottom discharge curb.	SRSE
580B 090-120	81.75	59.38	389004-201	Bottom discharge curb.	SRSE
580C-D 036-072	70.88	40.69	389028-201	Bottom discharge curb.	SRSE
585A 018-024	54.50	43.75	301585-301	Bottom discharge curb.	SRSE
585A 024-036	64.50	43.75	301585-302	Bottom discharge curb.	SRSE
585A 048-060	70.50	57.75	301585-303	Bottom discharge curb.	SRSE
585A 048-060	70.50	66.00	301585-304	Bottom discharge curb.	SRSE
585C 018050-036075	64.00	51.25	72-24-02	Stiles Corp. made curb.	SRSE
585C 036125-060150	77.00	51.25	72-24-03	Stiles Corp. made curb.	SRSE
585C 090	90.00	55.00	DPPC-008DG	Stiles Corp. made curb.	RDSL
585C 090-150	81.75	53.50	389028-203	Bottom discharge curb.	SRSE
585E 090	80.56	60.75	307175-102	Bottom discharge curb.	SERL
585E-G 018-036075	59.50	50.50	304851-303	Bottom discharge curb.	SRSE
585E-G048125-060	70.50	62.50	304851-304	Bottom discharge curb.	SRSE

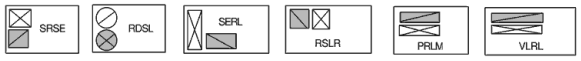

Curb-maker drawing (UNVERIFIED) · page 2 · https://www.ruskinrooftopsystems.com/Portals/5/bdp_web_adapters.pdf

TOP VIEW · LOOKING DOWN ON THE CURB · TO SCALE

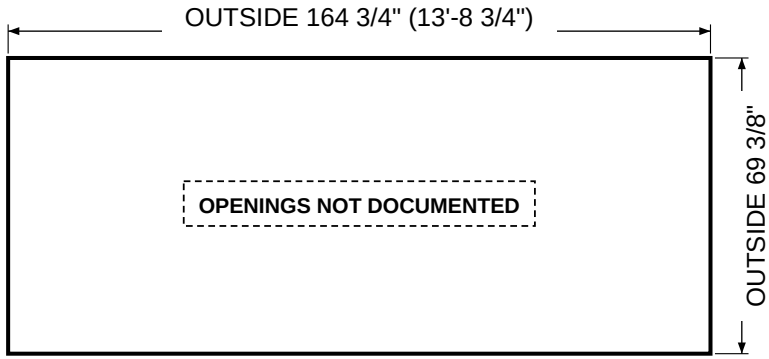

Rail width not documented, so the inside line is not drawn.
Measure here: OUTSIDE of the curb rail with a tape; unit end not documented.

Carrier/Bryant/ICP — UNVERIFIED
Part # 70849D05
OUTSIDE 164 3/4 × 69 3/8" · Tons 25 T · legacy

SOURCE EXCERPT (left: the cited page of the manufacturer or curb-maker document) beside our TOP VIEW drawing (right, to scale, looking down).
Openings are drawn only where their offsets are documented; offsets run from the OUTSIDE left end and OUTSIDE bottom side. Curb-maker sources are UNVERIFIED.

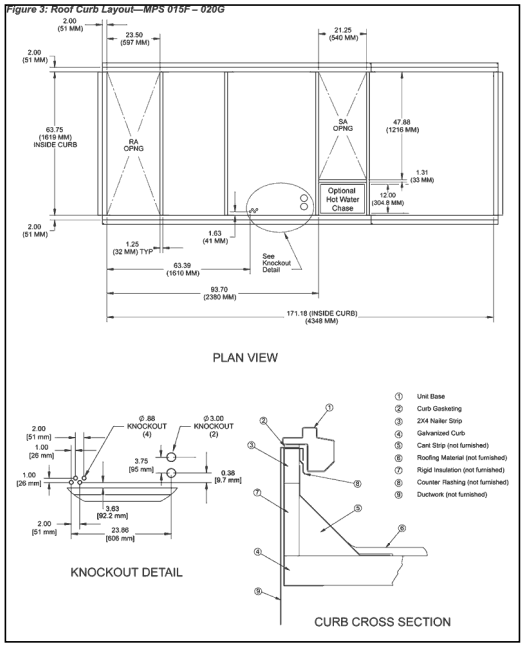

Manufacturer drawing · page 7 · https://www.stinebaugh.com/wp-content/uploads/DAIKIN-APPLIED-Maverick-II-MPS-15-50-Ton.pdf

TOP VIEW · LOOKING DOWN ON THE CURB · TO SCALE

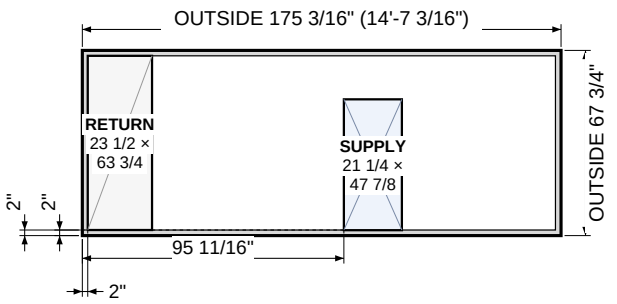

Grey band = curb rail, 2" wide. Inner line = INSIDE of rail: 171 3/16 × 63 3/4" (outside minus 2 × rail, calculated).
Offsets: from the OUTSIDE left end and the OUTSIDE bottom side of the curb to the opening's near edge. Openings are clear inside sizes.
Measure here: OUTSIDE of the curb rail with a tape; unit end not documented.

Daikin/Goodman/Amana — **CALCULATED**
Part # MPS 015F-020G factory roof curb (P/N not printed)
OUTSIDE 175 3/16 × 67 3/4" · Height (see curb detail / not tabulated) in · 15-20 T · legacy
Ref: x from the RETURN end outside edge, y from the long side the supply touches (top of plan view); RA right after the 2.00 rail across full inside width; sup_x = 2.00 rail + 93.70 printed from the inner end face (derived)

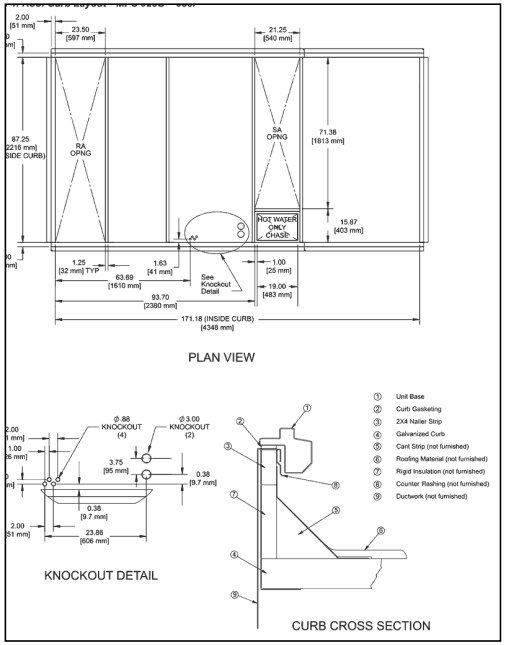

Manufacturer drawing · page 8 · https://www.stinebaugh.com/wp-content/uploads/DAIKIN-APPLIED-Maverick-II-MPS-15-50-Ton.pdf

TOP VIEW · LOOKING DOWN ON THE CURB · TO SCALE

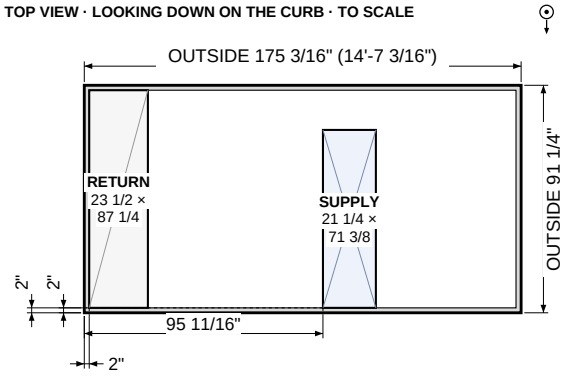

Grey band = curb rail, 2" wide. Inner line = INSIDE of rail: 171 3/16 × 87 1/4" (outside minus 2 × rail, calculated).
Offsets: from the OUTSIDE left end and the OUTSIDE bottom side of the curb to the opening's near edge. Openings are clear inside sizes.
Measure here: OUTSIDE of the curb rail with a tape; unit end not documented.

Daikin/Goodman/Amana — **CALCULATED**
Part # MPS 026G-035F factory roof curb (P/N not printed)
OUTSIDE 175 3/16 × 91 1/4" · Height (see curb detail / not tabulated) in · 26-35 T · legacy
Ref: x from the RETURN end outside edge, y from the long side the supply touches (top of plan view); RA right after the 2.00 rail across full inside width; sup_x = 2.00 rail + 93.70 printed from the inner end face (derived)

SOURCE EXCERPT (left: the cited page of the manufacturer or curb-maker document) beside our TOP VIEW drawing (right, to scale, looking down).
Openings are drawn only where their offsets are documented; offsets run from the OUTSIDE left end and OUTSIDE bottom side. Curb-maker sources are UNVERIFIED.

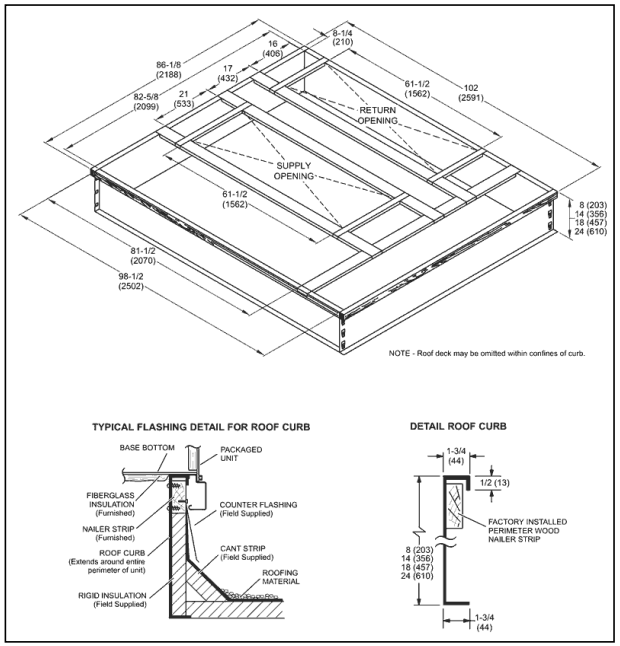

Manufacturer drawing · page 43 · https://lockeproductionblob.blob.core.windows.net/storage/products/attachments/2019/03/04/f0709b9a82e5

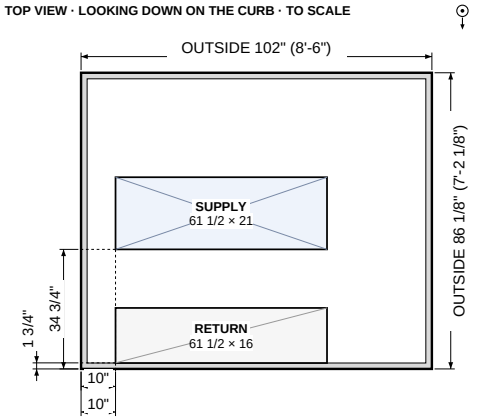

Grey band = curb rail, 1 3/4" wide. Inner line = INSIDE of rail: 98 1/2 × 82 5/8" (outside minus 2 × rail, calculated).
Offsets: from the OUTSIDE left end and the OUTSIDE bottom side of the curb to the opening's near edge. Openings are clear inside sizes.
Measure here: OUTSIDE of the curb rail with a tape; unit end not documented.

Lennox VERIFIED
Part # C1CURB70C-1 (8) 11F58 / C1CURB71C-1 (14) 11F59 / C1CURB72C-1 (18) 11F60 / C1CURB73C-1 (24) 11F61
OUTSIDE 102 × 86 1/8" · Height 8,14,18,24 in · 13-25 T
Ref: x from either end openings start 8-1/4 inside the end rail (1-3/4+8-1/4, derived); y from the long side the return sits against: return 16, 17 band, supply 21 (sup_y = 1-3/4+16+17, derived)

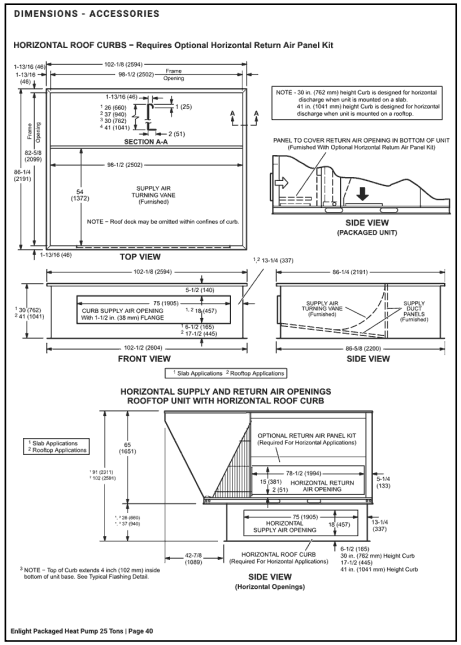

Manufacturer drawing · page 40 · https://www.lennox.com/dA/1ea2d6640b/ehb_lht_dbox_a2l_2603.pdf

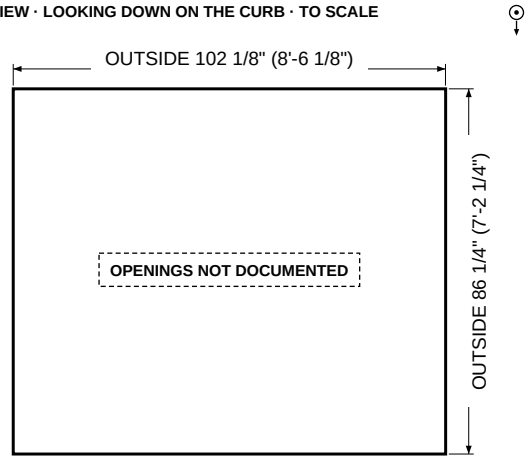

Rail width not documented, so the inside line is not drawn.
Measure here: OUTSIDE of the curb rail with a tape; unit end not documented.

Lennox VERIFIED
Part # 11T90 (30 in, slab) / 11T97 (41 in, rooftop) horizontal roof curb
OUTSIDE 102 1/8 × 86 1/4" · Height 30 / 41 in · 25 T
Also OUTSIDE (bottom) 102 1/2 × 86 5/8"

SOURCE EXCERPT (left: the cited page of the manufacturer or curb-maker document) beside our TOP VIEW drawing (right, to scale, looking down).
Openings are drawn only where their offsets are documented; offsets run from the OUTSIDE left end and OUTSIDE bottom side. Curb-maker sources are UNVERIFIED.

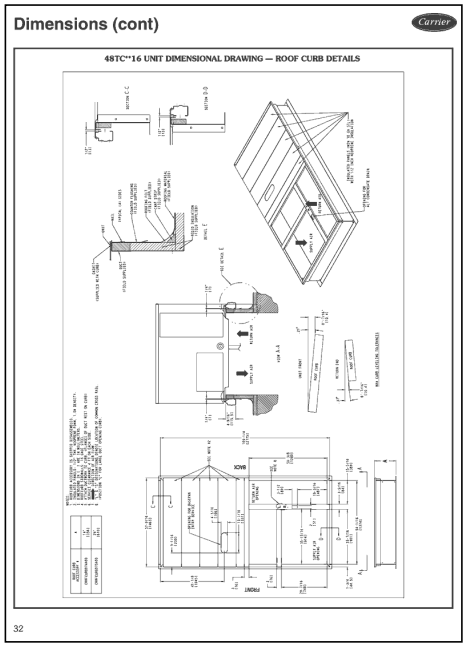

Manufacturer drawing · page 32 · https://www.shareddocs.com/hvac/docs/1005/public/05/48tc-7-16-03pd.pdf

TOP VIEW · LOOKING DOWN ON THE CURB · TO SCALE

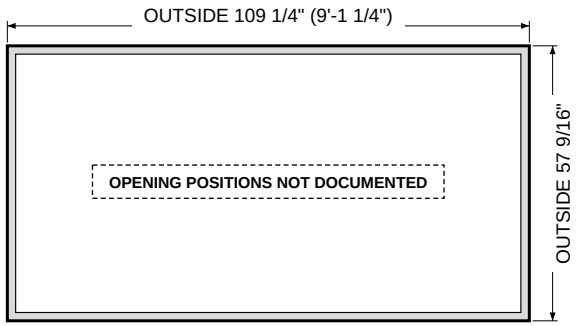

Grey band = curb rail, 1 3/4" wide. Inner line = INSIDE of rail: 105 3/4 × 54 1/16" (outside minus 2 × rail, calculated).
Supply opening 29 7/16 × 35 7/16": size documented, position not documented (not drawn).
Measure here: OUTSIDE of the curb rail with a tape; unit end not documented.

Carrier/Bryant/ICP VERIFIED
Part # CRRFCURB074A00 (14 in) / CRRFCURB075A00 (24 in)
OUTSIDE 109 1/4 × 57 9/16" · Height 14 / 24 in · Tons 15 T
Ref: y from the supply (front) side of the plan outline 57-9/16; 1.75 rail band printed; ret_y derived 1.75+35.4375+3.3125 (1.75+35.4375+3.3125+15.3125+1.75 = 57.5625, closes); x offsets and return length not printed clearly enough to give

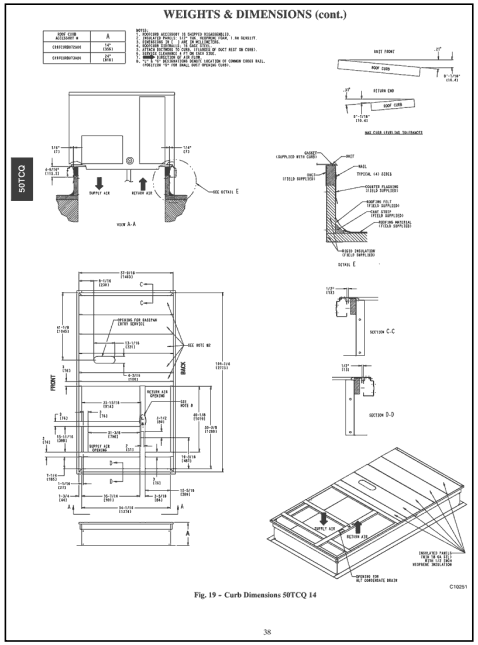

Manufacturer drawing · page 38 · https://www.carrier.com.mx/content/commercial/residenciales/40.pdf?time=168e996062aa01bbbf3

TOP VIEW · LOOKING DOWN ON THE CURB · TO SCALE

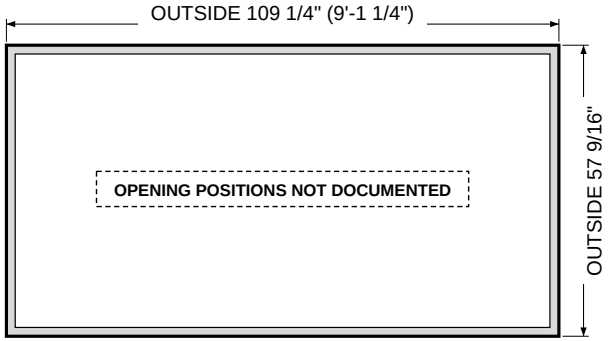

Grey band = curb rail, 1 3/4" wide. Inner line = INSIDE of rail: 105 3/4 × 54 1/16" (outside minus 2 × rail, calculated).
Opening sizes are in the list; their positions are not documented, so none are drawn.
Measure here: OUTSIDE of the curb rail with a tape; unit end not documented.

Carrier/Bryant/ICP VERIFIED
Part # CRRFCURB072A00 (14 in) / CRRFCURB073A00 (24 in)
OUTSIDE 109 1/4 × 57 9/16" · Height 14 / 24 in · 12.5 T
Ref: outline and opening sizes from the factory plan view; opening offsets not given here

SOURCE EXCERPT (left: the cited page of the manufacturer or curb-maker document) beside our TOP VIEW drawing (right, to scale, looking down).
Openings are drawn only where their offsets are documented; offsets run from the OUTSIDE left end and OUTSIDE bottom side. Curb-maker sources are UNVERIFIED.

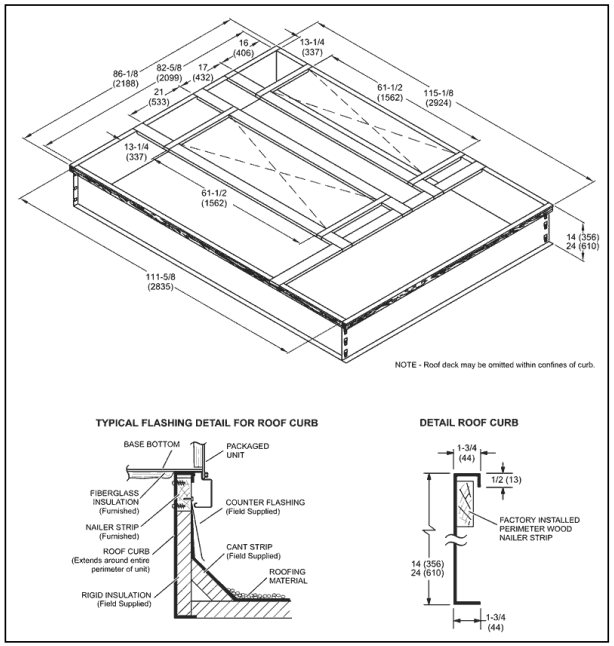

Manufacturer drawing · page 47 · https://www.lennox.com/dA/05afeb0294/ehb_sch_03to20_a2l_2409.pdf

TOP VIEW · LOOKING DOWN ON THE CURB · TO SCALE

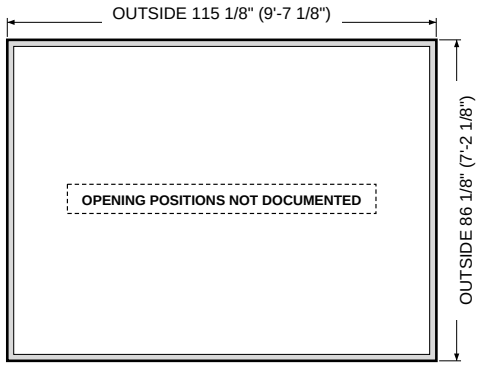

Grey band = curb rail, 1 3/4" wide. Inner line = INSIDE of rail: 111 5/8 × 82 5/8" (outside minus 2 × rail, calculated).
Supply opening 61 1/2 × 21": size documented, position not documented (not drawn).
Return opening 61 1/2 × 16": size documented, position not documented (not drawn).
Measure here: OUTSIDE of the curb rail with a tape; unit end not documented.

Lennox VERIFIED
Part # 11F74 (14 in) / 11F75 (24 in) hybrid full perimeter
OUTSIDE 115 1/8 × 86 1/8" · Height 14 / 24 in · 20 T
Ref: openings run lengthwise; x from the end the two 13-1/4 dims start from, derived 1.75+13.25 (assumes 13-1/4 from inside of rail); y not dimensioned (21 opening nearest one side, 17 gap, then 16) - left out; supply/return labels absent, 21=supply assumed

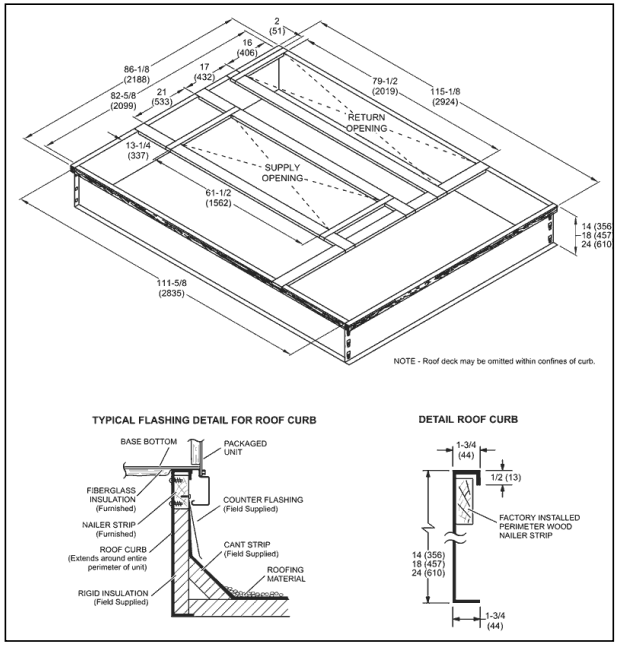

Manufacturer drawing · page 37 · https://www.lennox.com/dA/a00925e3aa/ehb_lht_dbox_a2l_2507.pdf

TOP VIEW · LOOKING DOWN ON THE CURB · TO SCALE

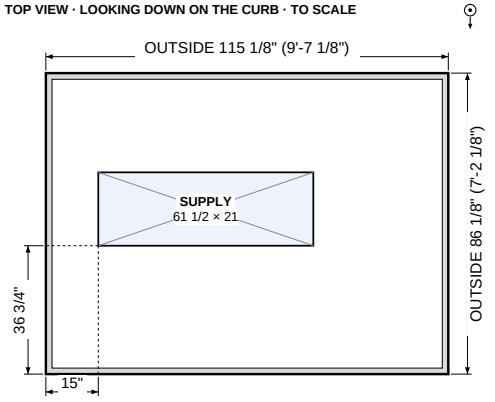

Grey band = curb rail, 1 3/4" wide. Inner line = INSIDE of rail: 111 5/8 × 82 5/8" (outside minus 2 × rail, calculated).
Offsets: from the OUTSIDE left end and the OUTSIDE bottom side of the curb to the opening's near edge. Openings are clear inside sizes.
Return opening 79 1/2 × 16": size documented, position not documented (not drawn).
Measure here: OUTSIDE of the curb rail with a tape; unit end not documented.

Lennox VERIFIED
Part # 11F62 (14 in) / 11F63 (18 in) / 11F64 (24 in) hybrid downflow
OUTSIDE 115 1/8 × 86 1/8" · Height 14 / 18 / 24 in · 25-30 T
Ref: openings run lengthwise; y from the side nearest the return (1.75 rail + 2 offset), sup_y = 3.75+16+17; sup_x = 1.75+13.25 from supply end; derived; ret_x not dimensioned

SOURCE EXCERPT (left: the cited page of the manufacturer or curb-maker document) beside our TOP VIEW drawing (right, to scale, looking down).
Openings are drawn only where their offsets are documented; offsets run from the OUTSIDE left end and OUTSIDE bottom side. Curb-maker sources are UNVERIFIED.

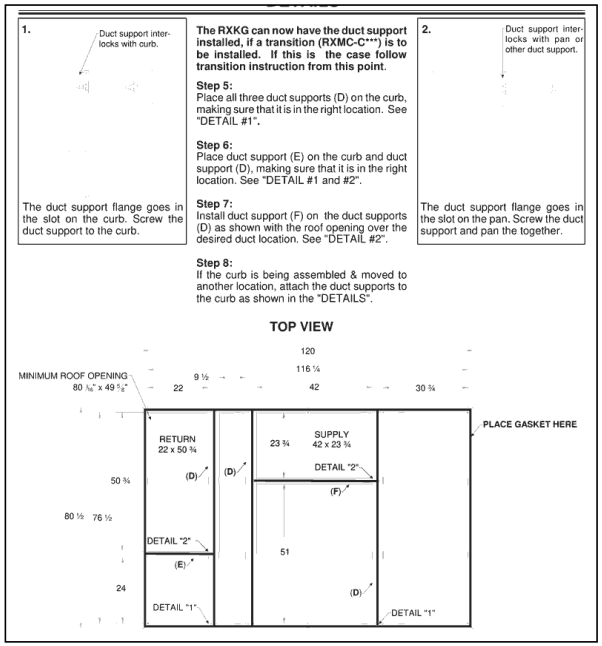
1.
Duct support interlocks with curb.
The duct support flange goes in the slot on the curb. Screw the duct support to the curb.
The RXKG can now have the duct support installed, if a transition (RXMC-C***) is to be installed. If this is the case follow transition instruction from this point.
Step 5:
Place all three duct supports (D) on the curb, making sure that it is in the right location. See "DETAIL #1".
Step 6:
Place duct support (E) on the curb and duct support (D), making sure that it is in the right location. See "DETAIL #1 and #2".
Step 7:
Install duct support (F) on the duct supports (D) as shown with the roof opening over the desired duct location. See "DETAIL #2".
Step 8:
If the curb is being assembled & moved to another location, attach the duct supports to the curb as shown in the "DETAILS".
2.
Duct support interlocks with pan or other duct support.
The duct support flange goes in the slot on the pan. Screw the duct support and pan the together.
TOP VIEW
120
116 ¼
MINIMUM ROOF OPENING
80 ⅛" x 49 ⅝"
9 ½
22
42
30 ¾
PLACE GASKET HERE
RETURN
22 x 50 ¾
SUPPLY
42 x 23 ¾
23 ¾
DETAIL "2"
(D)
(F)
(E)
50 ¾
80 ⅛
76 ½
51
24
DETAIL "1"

Manufacturer drawing · page 3 · https://www.meiersupply.com/customer/docs/skudocs/Document_Links/Vendors/106903%20-%20Ruud%20F

TOP VIEW · LOOKING DOWN ON THE CURB · TO SCALE

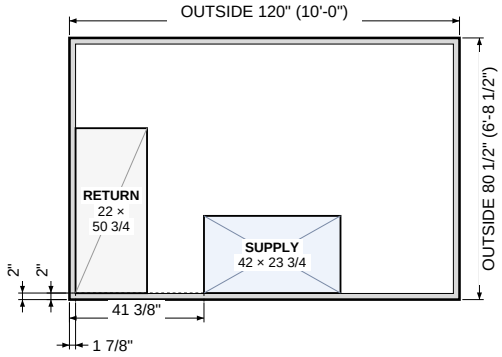

Grey band = curb rail, 1 7/8" wide. Inner line = INSIDE of rail: 116 1/4 × 76 3/4" (outside minus 2 × rail, calculated).
Offsets: from the OUTSIDE left end and the OUTSIDE bottom side of the curb to the opening's near edge. Openings are clear inside sizes.
Measure here: OUTSIDE of the curb rail with a tape; unit end not documented.

Rheem/Ruud VERIFIED
Part # RXKG-CBH14
OUTSIDE 120 × 80 1/2" · Height 14 in · 15-25 T
Ref: x from the return end, y from the long side at the top of the Top View (both openings start against it); end rail 1-7/8 = (120-116-1/4)/2, side rail 2 = (80-1/2-76-1/2)/2; sup_x derived 1.875+22+4+9.5+4 = 41.375 assuming the three 76-1/2 supports (D) are 4 in wide (the only width that closes 22+9.5+42+30.75+12 = 116.25)

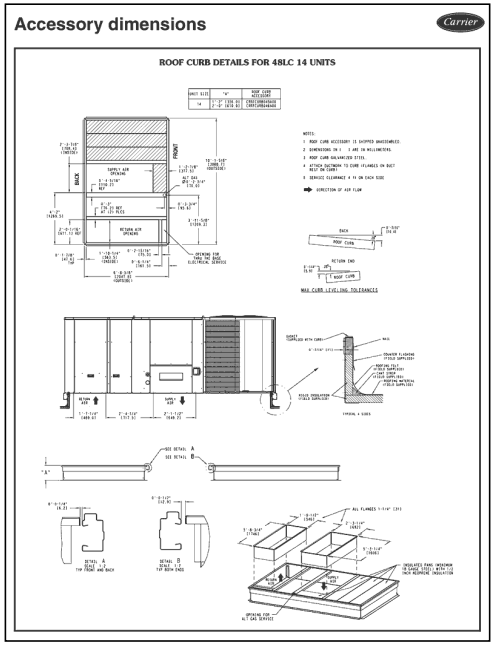
Accessory dimensions
Carrier
ROOF CURB DETAILS FOR 48LC 14 UNITS

Manufacturer drawing · page 30 · https://www.shareddocs.com/hvac/docs/1005/Public/0D/48LC-14-26-05PD.pdf

TOP VIEW · LOOKING DOWN ON THE CURB · TO SCALE

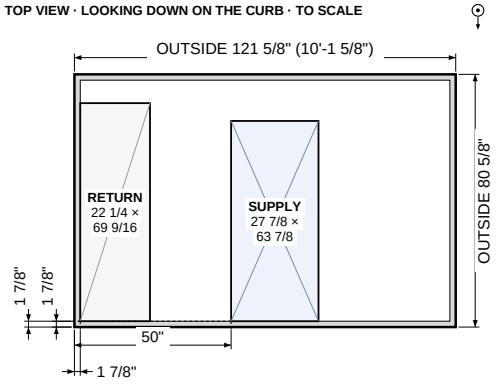

Grey band = curb rail, 1 7/8" wide. Inner line = INSIDE of rail: 117 7/8 × 76 7/8" (outside minus 2 × rail, calculated).
Offsets: from the OUTSIDE left end and the OUTSIDE bottom side of the curb to the opening's near edge. Openings are clear inside sizes.
Measure here: OUTSIDE of the curb rail with a tape; unit end not documented.

Carrier/Bryant/ICP VERIFIED
Part # CRRFCURB045A00 (14 in) / CRRFCURB046A00 (24 in)
OUTSIDE 121 5/8 × 80 5/8" · Height 14 / 24 in · Tons 12.5 T (48LC14); 15-17.5 T (48TC 17/20)
Ref: x from the outside RETURN end, y from the outside BACK side; sup_x 4'-2 printed; ret_x/sup_y/ret_y = 1'-7/8 rail; sup_wid derived 80.625-1.875-14.875 (1'-2 7/8 hatched block to front outside); ret_wid derived 80.625-1.875-6.25-2.9375 (electrical opening); along-length sizes printed INSIDE

SOURCE EXCERPT (left: the cited page of the manufacturer or curb-maker document) beside our TOP VIEW drawing (right, to scale, looking down).
Openings are drawn only where their offsets are documented; offsets run from the OUTSIDE left end and OUTSIDE bottom side. Curb-maker sources are UNVERIFIED.

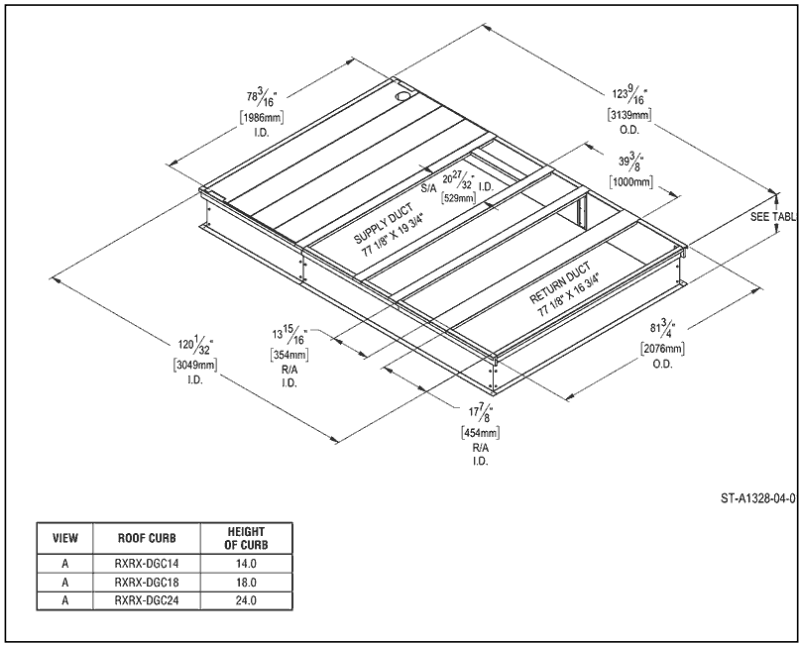

VIEW	ROOF CURB	HEIGHT OF CURB
A	RXRX-DGC14	14.0
A	RXRX-DGC18	18.0
A	RXRX-DGC24	24.0

Manufacturer drawing · page 74 · https://files.myrheem.com/webpartners/ProductDocuments/0860C7B1-A31F-461B-ABEC-2A2A27F936DD.pc

TOP VIEW · LOOKING DOWN ON THE CURB · TO SCALE

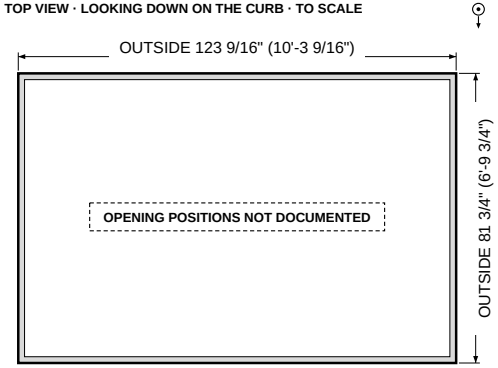

Grey band = curb rail, 1 3/4" wide. Inner line = INSIDE of rail: 120 × 78 3/16" (outside minus 2 × rail, calculated).
Supply opening 20 7/8 × 78 3/16": size documented, position not documented (not drawn).
Return opening 17 7/8 × 78 3/16": size documented, position not documented (not drawn).
Measure here: OUTSIDE of the curb rail with a tape; unit end not documented.

Rheem/Ruud VERIFIED
Part # RXRX-DGC14 / RXRX-DGC18 / RXRX-DGC24
OUTSIDE 123 9/16 × 81 3/4" · Height 14, 18, 24 in · 15-25 T
Ref: sizes = bays I.D. (supply 20-27/32, return 17-7/8, plus a second 13-15/16 R/A bay), all spanning the full 78-3/16 inside width so y = side rail; rail derived (123-9/16-120-1/32)/2=1.766, (81-3/4-78-3/16)/2=1.781; x positions not given: isometric shows 39-3/8 [1000mm] from the O.D. end toward the supply bay but its extension lines are not unambiguous, so sup_x/ret_x omitted

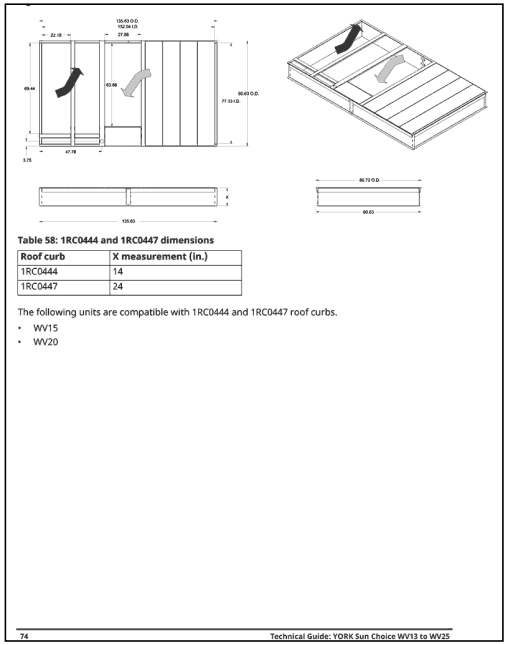

Table 58: 1RC0444 and 1RC0447 dimensions

Roof curb	X measurement (in.)
1RC0444	14
1RC0447	24

The following units are compatible with 1RC0444 and 1RC0447 roof curbs.

- WV15
- WV20

74 Technical Guide: YORK Sun Choice WV13 to WV25

Manufacturer drawing · page 74 · https://files.hvacnavigator.com/p/6434416-ytg-b-1224.pdf

TOP VIEW · LOOKING DOWN ON THE CURB · TO SCALE

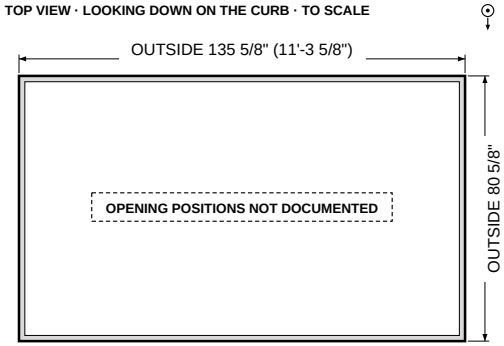

Grey band = curb rail, 1 3/4" wide. Inner line = INSIDE of rail: 132 1/8 × 77 1/8" (outside minus 2 × rail, calculated).
Supply opening 27 7/8 × 63 7/8": size documented, position not documented (not drawn).
Measure here: OUTSIDE of the curb rail with a tape; unit end not documented.

York/JCI VERIFIED
Part # 1RC0444 (14 in) / 1RC0447 (24 in)
OUTSIDE 135 5/8 × 80 5/8" · Height 14 / 24 in · 15-25 T
Also OUTSIDE (ProVent CBKDSAV2025 replacement curb O.D. (unverified)) 135 1/8 × 80 1/8"
Ref: x from the return/blower outside end, y from the BACK outside side (inside rail 1.75 = (O.D.-I.D.)/2). Return section runs from the end rail to a divider centered 47.78 from the outside end (printed); it is split by a center duct support, first bay 22.19 printed; total return length about 44 is SCALED, not printed, so ret_len is omitted. sup_x not printed (starts right after that divider), omitted.

SOURCE EXCERPT (left: the cited page of the manufacturer or curb-maker document) beside our TOP VIEW drawing (right, to scale, looking down).
Openings are drawn only where their offsets are documented; offsets run from the OUTSIDE left end and OUTSIDE bottom side. Curb-maker sources are UNVERIFIED.

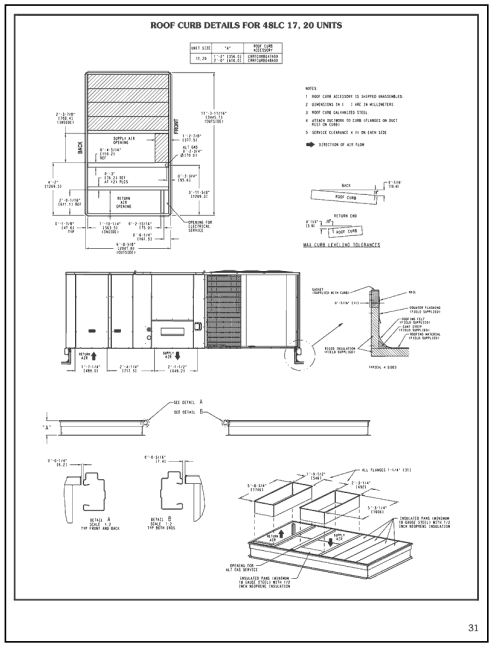
ROOF CURB DETAILS FOR 48LC 17, 20 UNITS

31

Manufacturer drawing · page 31 · https://www.shareddocs.com/hvac/docs/1005/Public/0D/48LC-14-26-05PD.pdf

TOP VIEW · LOOKING DOWN ON THE CURB · TO SCALE

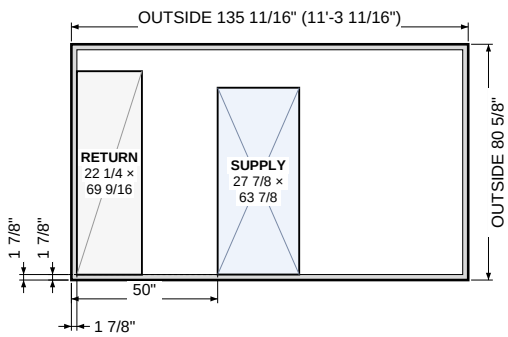

Grey band = curb rail, 1 7/8" wide. Inner line = INSIDE of rail: 131 15/16 × 76 7/8" (outside minus 2 × rail, calculated).
Offsets: from the OUTSIDE left end and the OUTSIDE bottom side of the curb to the opening's near edge. Openings are clear inside sizes.
Measure here: OUTSIDE of the curb rail with a tape; unit end not documented.

Carrier/Bryant/ICP VERIFIED
Part # CRRFCURB047A00 (14 in) / CRRFCURB048A00 (24 in)
OUTSIDE 135 11/16 × 80 5/8" · Height 14 / 24 in · Tons 15-17.5 T (48LC); 20-25 T (48TC 24/28)
Ref: x from the outside RETURN end, y from the outside BACK side; sup_x 4'-2 printed; ret_x/sup_y/ret_y = 1'-7/8 rail; sup_wid derived 80.625-1.875-14.875 (1'-2 7/8 hatched block to front outside); ret_wid derived 80.625-1.875-6.25-2.9375 (electrical opening); along-length sizes printed INSIDE

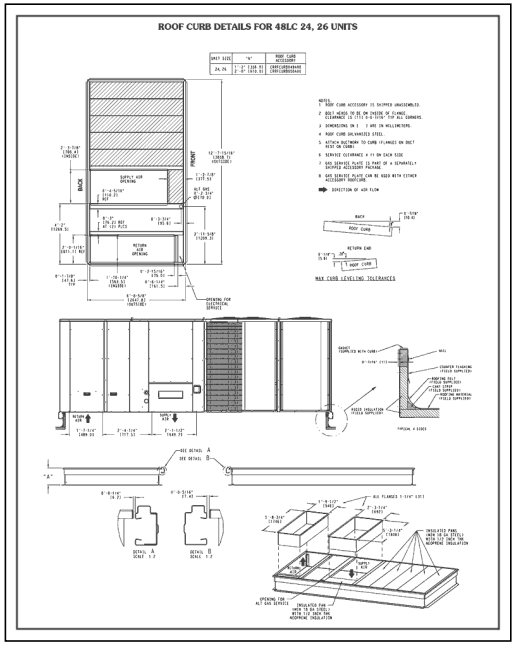
ROOF CURB DETAILS FOR 48LC 24, 26 UNITS

Manufacturer drawing · page 32 · https://www.shareddocs.com/hvac/docs/1005/Public/0D/48LC-14-26-05PD.pdf

TOP VIEW · LOOKING DOWN ON THE CURB · TO SCALE

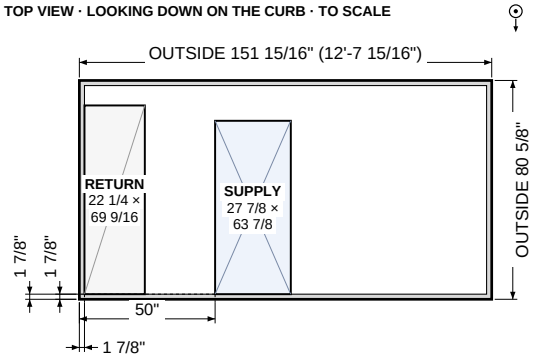

Grey band = curb rail, 1 7/8" wide. Inner line = INSIDE of rail: 148 3/16 × 76 7/8" (outside minus 2 × rail, calculated).
Offsets: from the OUTSIDE left end and the OUTSIDE bottom side of the curb to the opening's near edge. Openings are clear inside sizes.
Measure here: OUTSIDE of the curb rail with a tape; unit end not documented.

Carrier/Bryant/ICP VERIFIED
Part # CRRFCURB049A00 (14 in) / CRRFCURB050A00 (24 in)
OUTSIDE 151 15/16 × 80 5/8" · Height 14 / 24 in · Tons 20-25 T (48LC); 25-27.5 T (48TC 30)
Ref: x from the outside RETURN end, y from the outside BACK side; sup_x 4'-2 printed; ret_x/sup_y/ret_y = 1'-7/8 rail; sup_wid derived 80.625-1.875-14.875 (1'-2 7/8 hatched block to front outside); ret_wid derived 80.625-1.875-6.25-2.9375 (electrical opening); along-length sizes printed INSIDE

SOURCE EXCERPT (left: the cited page of the manufacturer or curb-maker document) beside our TOP VIEW drawing (right, to scale, looking down).
Openings are drawn only where their offsets are documented; offsets run from the OUTSIDE left end and OUTSIDE bottom side. Curb-maker sources are UNVERIFIED.

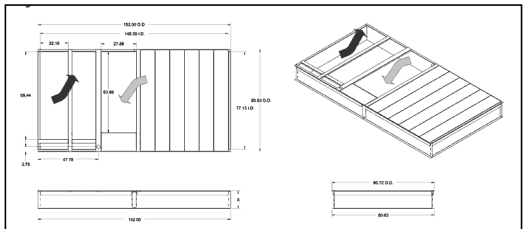

Table 59: 1RC0445 and 1RC0448 dimensions

Roof curb	X measurement (in.)
1RC0445	14
1RC0448	24

The following unit is compatible with 1RC0445 and 1RC0448 roof curbs.

- WV25

Technical Guide: YORK Sun Choice WV13 to WV25 75

Manufacturer drawing · page 75 · https://files.hvacnavigator.com/p/6434416-ytg-b-1224.pdf

TOP VIEW · LOOKING DOWN ON THE CURB · TO SCALE

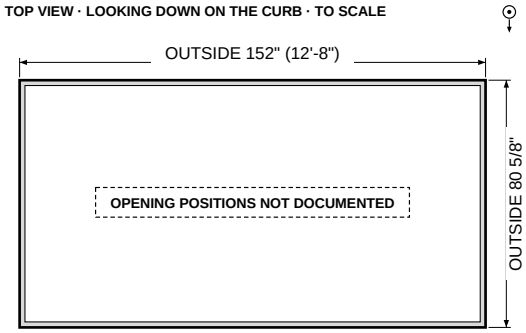

Grey band = curb rail, 1 3/4" wide. Inner line = INSIDE of rail: 148 1/2 × 77 1/8" (outside minus 2 × rail, calculated).
Supply opening 27 7/8 × 63 7/8": size documented, position not documented (not drawn).
Measure here: OUTSIDE of the curb rail with a tape; unit end not documented.

York/JCI — VERIFIED
Part # 1RC0445 (14 in) / 1RC0448 (24 in)
OUTSIDE 152 × 80 5/8" · Height 14 / 24 in · 25-27.5 T
Also OUTSIDE (ProVent CBKDSAV28 replacement curb O.D. (unverified)) 151 1/2 × 80 1/8"
Ref: x from the return/blower outside end, y from the BACK outside side (inside rail 1.75 = (O.D.-I.D.)/2). Return section runs from the end rail to a divider centered 47.78 from the outside end (printed); it is split by a center duct support, first bay 22.19 printed; total return length about 44 is SCALED, not printed, so ret_len is omitted. sup_x not printed (starts right after that divider), omitted.

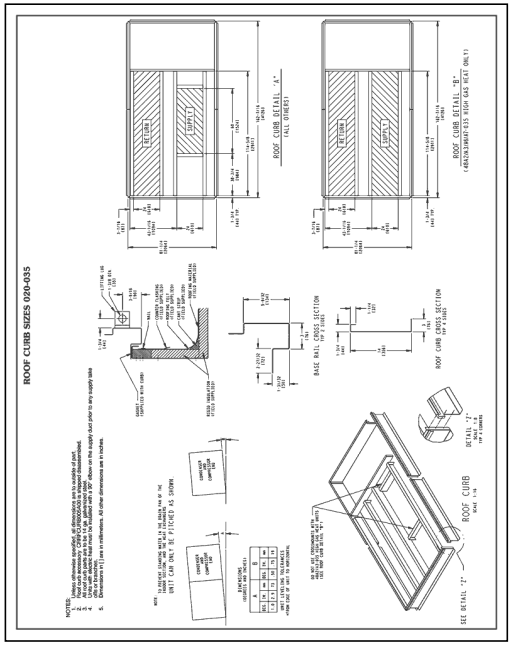

Manufacturer drawing · page 39 · https://www.shareddocs.com/hvac/docs/1005/Public/09/48_50A-19PD.pdf

TOP VIEW · LOOKING DOWN ON THE CURB · TO SCALE

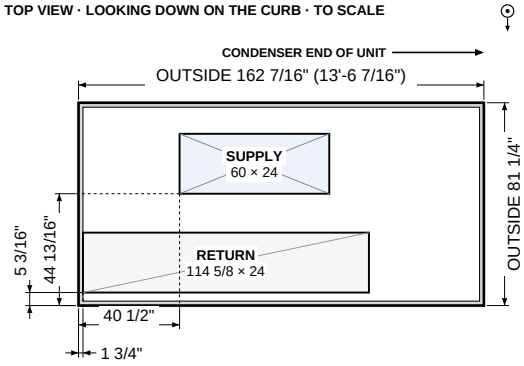

Grey band = curb rail, 1 3/4" wide. Inner line = INSIDE of rail: 158 15/16 × 77 3/4" (outside minus 2 × rail, calculated).
Offsets: from the OUTSIDE left end and the OUTSIDE bottom side of the curb to the opening's near edge. Openings are clear inside sizes.
Measure here: OUTSIDE of the curb rail with a tape.

Carrier/Bryant/ICP — VERIFIED
Part # CRRFCURB005A00
OUTSIDE 162 7/16 × 81 1/4" · Height 14 (doc lists 14 in curb weight) in · Tons 20-30 T
Ref: x from the outside end opposite the condenser section, y from the outside of the return-side rail; printed baselines run from the inside of the 1-3/4 TYP rail, so offsets derived as 1.75+38.75, 1.75+43.0625, 1.75+3.4375 (checked against drawing scale within ~0.3 in); ret_len = printed 114-5/8 to the crossmember